REPAIR PARTS MANUAL
MODEL NO. 277411
Lawn Tractor

CRAFTSMAN®

192515 04.19.04 MH
PRINTED IN U.S.A.

REPAIR PARTS

TRACTOR- -MODEL NO. 917. 277411

ELECTRICAL

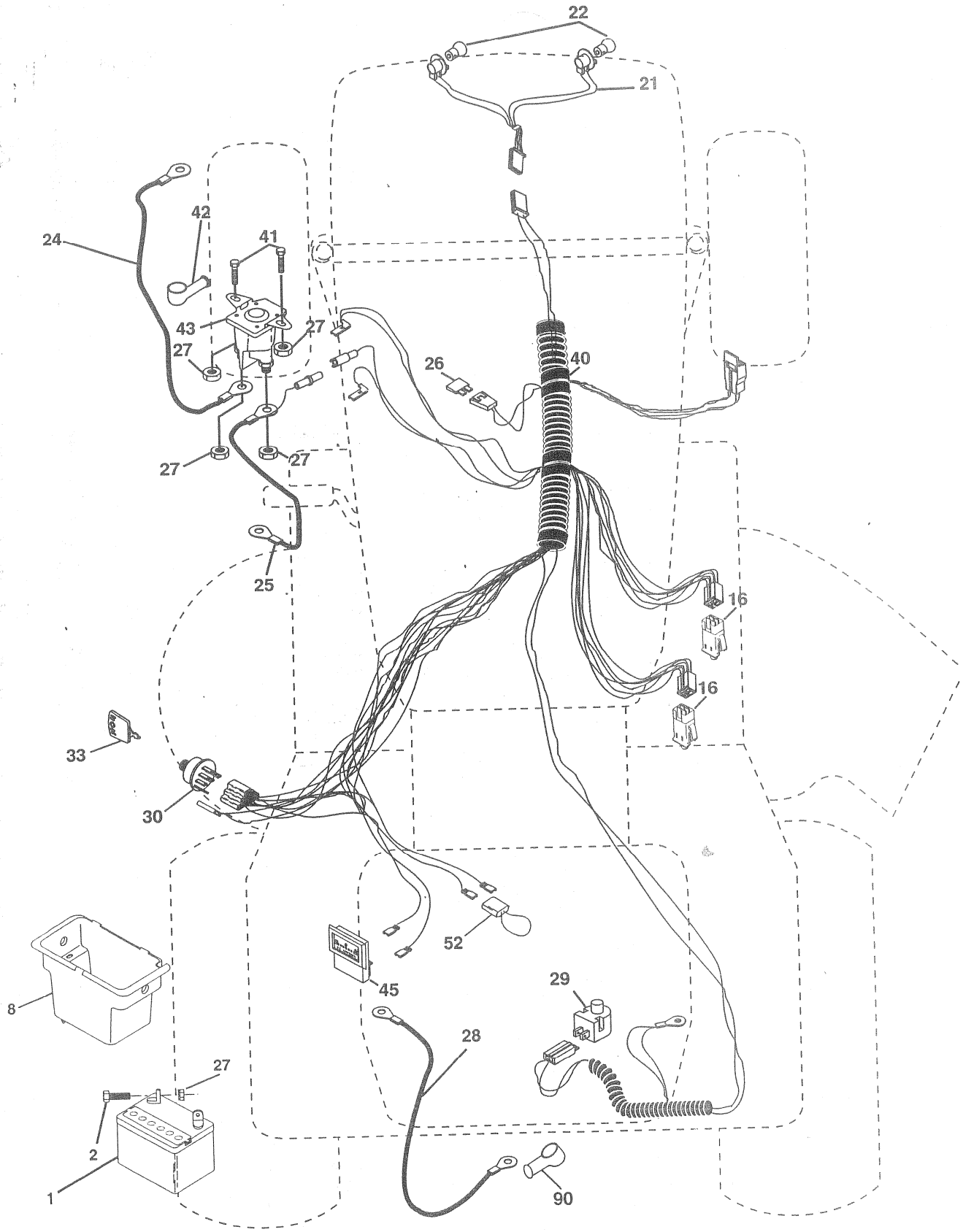

REPAIR PARTS

TRACTOR- -MODEL NO. 917. 277411

ELECTRICAL

KEY NO.	PART NO.	DESCRIPTION
1	163465	Battery
2	74760412	Bolt Hex Hd 1/4-20 unc x 3/4
8	176689	Box Battery
16	176138	Switch, Interlock
21	183759	Harness Asm Light W/4152j
22	4152J	Bulb Light #1156
24	4799J	Cable Battery 6 Ga. 11" red
25	146147	Cable Battery 6 Ga. w/16 wire red
26	175158	Fuse
27	73510400	Nut Keps Hex 1/4-20 unc
28	4207J	Cable Ground 6 Ga. 12" black
29	121305X	Switch Plunger Normal NC Gray
30	175566	Switch Ign
33	140403	Key Ign
40	179720	Harness Ign
41	71110408	Bolt Blk. Fin Hex 1/4-20 unc x 1/2
42	131563	Cover Terminal Red
43	178861	Solenoid
45	121433X	Ammeter Rectangular
52	141940	Protection Wire Loop
90	180449	Cover Terminal

NOTE: All component dimensions give in U.S. inches
1 inch = 25.4 mm

REPAIR PARTS

TRACTOR- -MODEL NO. 917. 277411

CHASSIS AND ENCLOSURES

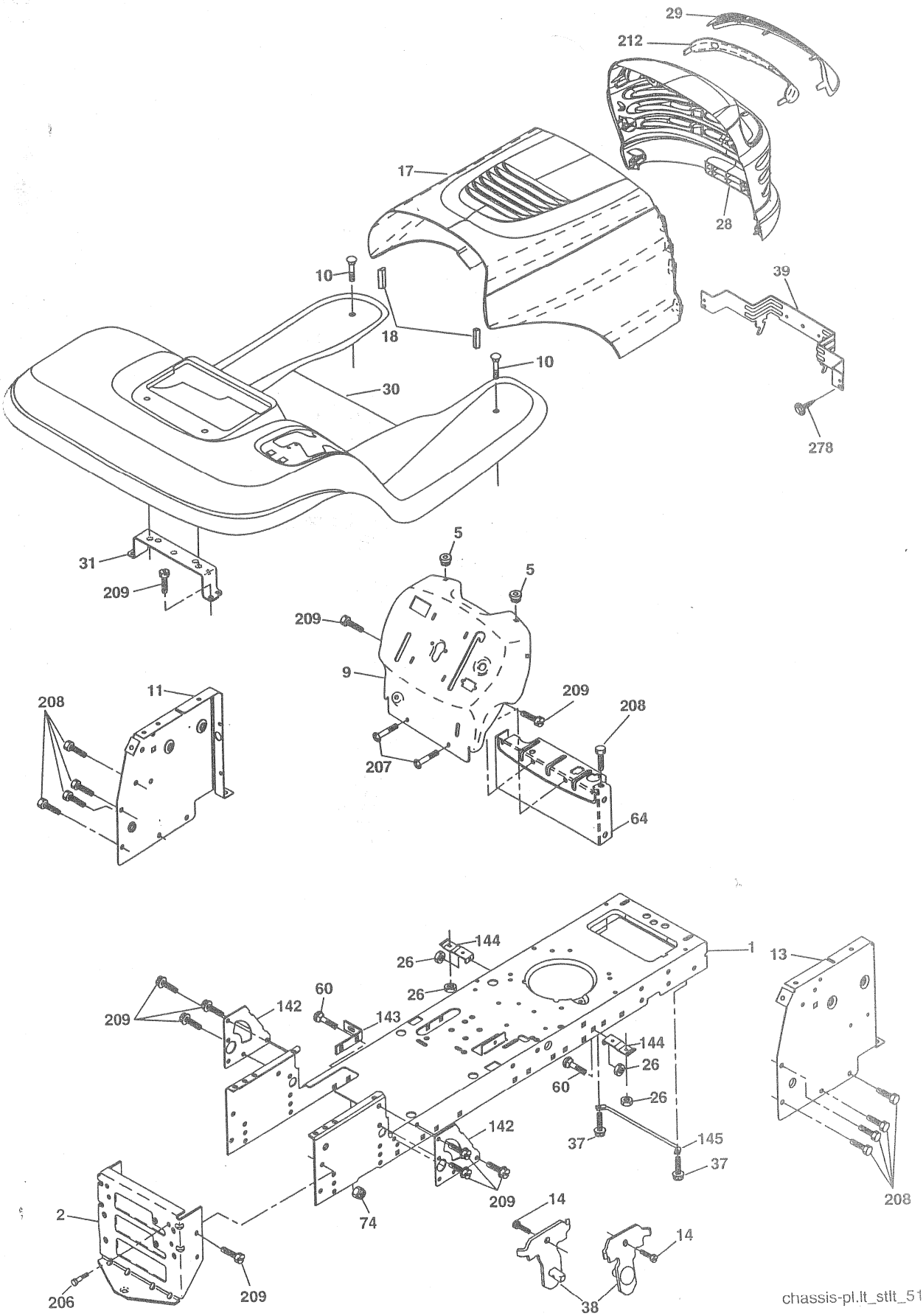

REPAIR PARTS

TRACTOR- -MODEL NO. 917. 277411

CHASSIS AND ENCLOSURES

KEY NO.	PART NO.	DESCRIPTION
1	174619	Chassis
2	176554	Drawbar
5	155272	Bumper Hood/Dash
9	**187846X014**	Dash
10	STD533710	Bolt, Carriage 3/8-16 x 3/4
11	174996	Panel, Dash, L.H.
13	172105X010	Panel, Dash, R.H.
14	17490608	Screw Thdrol 3/8-16 x 1/2
17	185682X558	Hood Assembly
18	184921	Bumper Hood
26	STD541437	Nut
28	190380	Grille/Lens Asm(Includes #'s 29 and 212)
29	174332X599	Lens Laser
30	**188571X558**	Fend/Ftrest
31	139976	Bracket, Fender Support
37	17490508	Screw Thdrol 5/16-18 x 1/2
38	175710	Pivot Bracket Assembly, Rear
39	174714	Bracket Pivot Laser Lt
60	72140606	Bolt Rdhd Sqnk 3/8-16 unc x 1
64	154798	Dash Lower STLT
74	STD541437	Nut Crownlock 3/8-16 unc
142	175702	Plate Reinforcement STLT
143	186689	Bracket Swaybar Chassis
144	175582	Bracket Pnt Footrest STLT
145	156524	Rod Pivot Chassis/Hood
166	171875	Screw Hwhd Hi-Lo #13-16 x 3/4
206	170165	Bolt Shoulder 5/16-18 TT
207	17670508	Screw Thdrol 5/16-18 x 1/2 Tytt
208	17670608	Screw Thdrol 3/8-16 x 1/2
209	17000612	Screw Hexwsh Thdr 3/8-16 x 3/4
212	175143	Insert Lens Reflective
278	**191611**	Screw
- -	5479J	Plug, Button

NOTE: All component dimensions given in U.S. inches
1 inch = 25.4 mm

EPAIR PARTS

TRACTOR- -MODEL NO. 917. 277411

RIVE

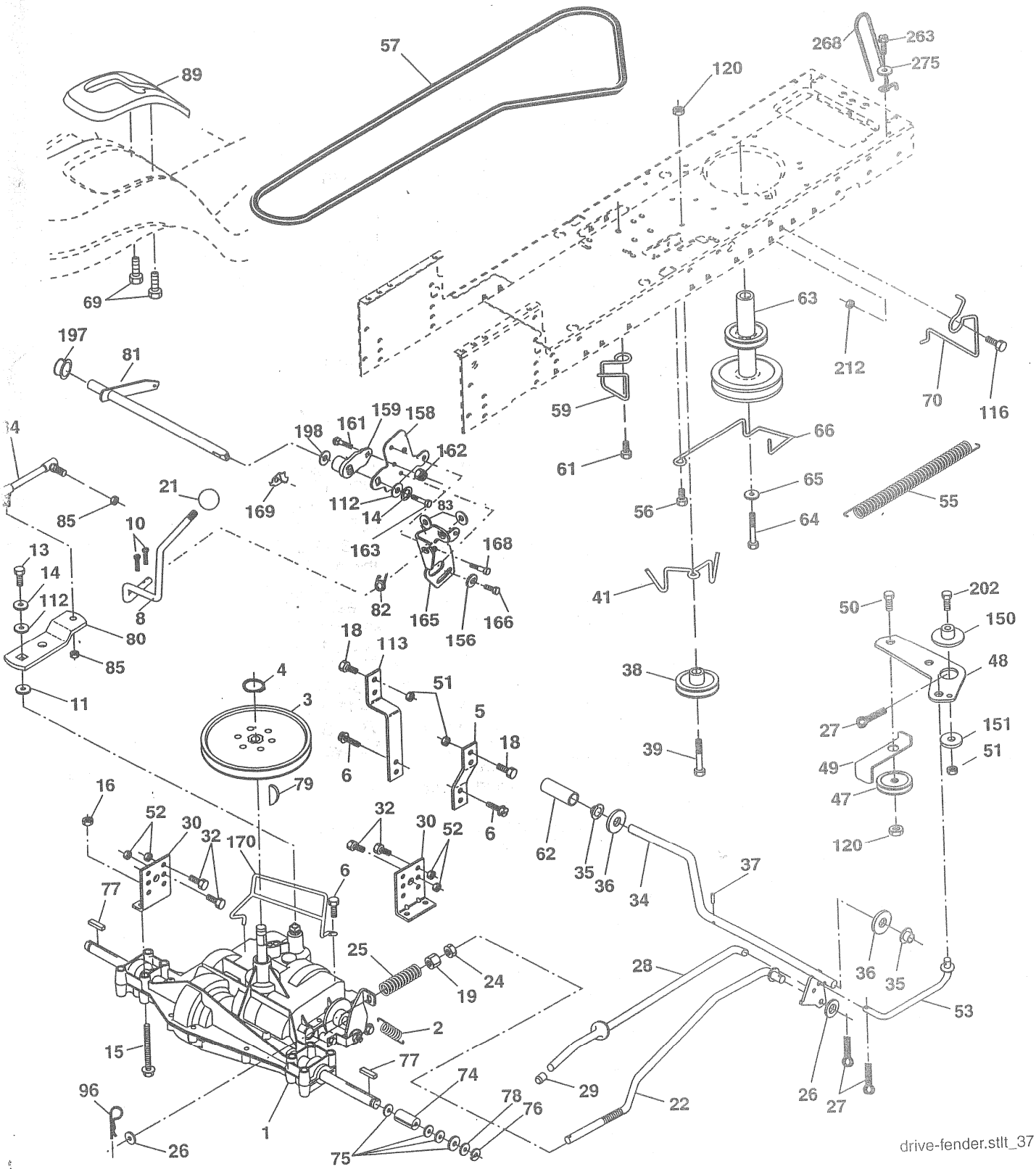

drive-fender.stlt_37

REPAIR PARTS

TRACTOR- -MODEL NO. 917. 277411

DRIVE

KEY NO.	PART NO.	DESCRIPTION
1	- - - - - -	Transaxle (See Breakdown) Dana D4360-140
2	146682	Spring Brake Return
3	123666X	Pulley Transaxle
4	12000028	Ring Retainer
5	121520X	Strap Torque 30 Degrees
6	17000612	Screw 5/16-18 x 3/4
8	165866	Rod Shift Fender Adjust
10	STD561210	Pin Cotter 1/8 x 1 CAD
11	105701X	Washer Plate Shift
13	74550412	Bolt 1/4-28unf Gr. 8 W/Patch
14	10040400	Washer Lock Hvy Helical
15	74490544	Bolt Hex FLGHD 5/16-18 x Gr. 5
16	STD541431	Nut Lock Hex W/Ins. 5/16-18 unc
18	74780616	Bolt Fin Hex 3/8-16 x 1 Gr. 5
19	STD541437	Nut Lock Hex W/Wsh 3/8-16 unc
21	106933X	Knob
22	130804	Rod, Brake
24	73350600	Nut, Hex Jam 3/8-16 unc
25	106888X	Spring, Brake Rod
26	STD551037	Washer 13/32 x 13/16 Ga.
27	STD561210	Pin Cotter 1/8 x 3/4 CAD.
28	175765	Rod, Parking Brake
29	71673	Cap, Parking Brake
30	174973	Bracket, Transaxle
32	74760512	Bolt Hex Hd 5/16-18 unc x 3/4
34	175578	Shaft, Foot Pedal
35	120183X	Bearing, Nylon
36	19211616	Washer
37	1572H	Pin, Roll
38	179114	Pulley, Composite, Flat
39	72110622	Bolt Rdhd 3/8-16 unc x 2-3/4 Gr. 5
41	175556	Keeper, Belt Idler
47	127783	Pulley, Idler, V-Groove
48	154407	Bellcrank, Clutch
49	123205X	Retainer, Belt
50	72110612	Bolt Carr 3/8-16 x 1-1/2
51	STD541437	Nut Crownlock 3/8-16 unc
52	STD541431	Nut, Crownlock 5/16-18 unc
53	105710X	Link, Clutch
55	105709X	Spring, Return, Clutch
56	17060620	Screw 3/8-16 x 1-1/4
57	160855	V-Belt
59	169691	Keeper, Center Span
61	17120614	Screw . 3/8-16 x .875
62	8883R	Cover, Pedal
63	180219	Pulley, Engine
64	173937	Bolt Hex 7/16-20 x 4 x Gr. 5
65	STD551143	Washer
66	154778	Keeper Belt Engine Hydro
69	142432	Screw Hex Wsh Hi-Lo 1/4 x 1/2 unc
70	180218	Keeper Belt Engine
74	109502X	Spacer
75	121749X	Washer 25/32 x 1-1/4 x 16 Ga.
76	STD581075	E-Ring
77	123583X	Key, Square
78	121748X	Washer 25/32 x 1-5/8 x 16 Ga.
79	2228M	Key Woodruff
80	131488	Arm Shift
81	165594	Shaft Asm Cross Tapered
82	165711	Spring Torsion
83	19171216	Washer 17/32 x 3/4 x 16 Ga.
84	166229	Link Transaxle
85	150360	Nut Lock Center 1/4-20
89	188310X428	Console, Shift
96	4497H	Retainer Spring 1" Zinc/Cad
112	19091210	Washer 9/32 x 3/4 x 10 Ga.
113	127285X	Strap Torque 90 Degrees
116	72140608	Bolt Rdhd Sqneck 3/8-16 x 1.25
120	73900600	Nut Lock Flg 3/8-16
150	175456	Spacer Retainer
151	19133210	Washer 13/32 x 2 x 10 Ga.
156	166002	Washer Srrted 5/16 ID x 1.125
158	165589	Bracket Shift Mount
159	183900	Hub Shift
161	72140406	Bolt Rdhd Sqnk 1/4-20 x 3/4 Gr 5
162	73680400	Nut Crownlock 1/4-20 unc
163	74780416	Bolt Hex Fin 1/4-20 unc x 1 Gr 5
165	165623	Bracket Pivot Lever
166	17490510	Screw 5/16-18 x 5/8
168	165492	Bolt Shoulder 5/16-18 x .561
169	165580	Plate Fastening
170	187414	Keeper Belt T/A
197	169613	Nyliner Snap-In 5/8"ID
198	169593	Washer Nyl 7/8 ID x .105" Hyd
202	72110614	Bolt Carr Sh 3/8-16 x 1-3/4 Gr. 5
212	145212	Nut Hex Flg. Lock
263	17000612	Screw 3/8-16 x 3/4
268	182402	Guard Muffler
275	19131614	Washer 13/32 x 1 x 14 Ga.

NOTE: All component dimensions given in U.S. inches
1 inch = 25.4 mm

EPAIR PARTS

TRACTOR- -MODEL NO. 917. 277411

TEERING ASSEMBLY

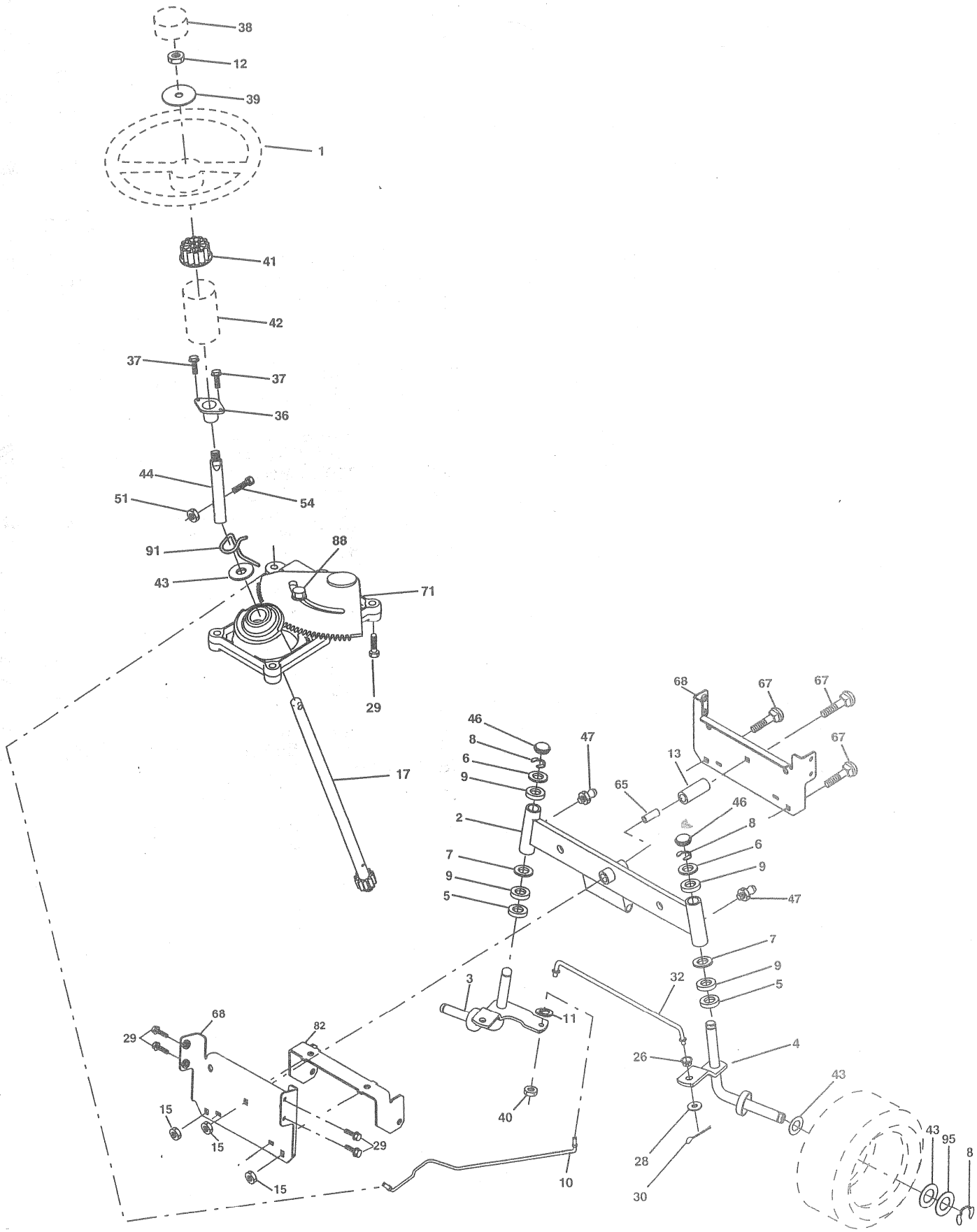

steering_pl.lt_46

REPAIR PARTS

TRACTOR- -MODEL NO. 917. 277411

STEERING ASSEMBLY

KEY NO.	PART NO.	DESCRIPTION
1	139768	Steering Wheel
2	175131	Axle Assembly
3	169840	Spindle Assembly, L.H.
4	169839	Spindle Assembly, R.H.
5	6266H	Bearing, Race, Thrust, Hardened
6	121748X	Washer 25/32 x 1-5/8 x 16 Ga.
7	19272016	Washer 27/32 x 1-1/4 x 16 Ga.
8	12000029	Ring, Klip
9	3366R	Bearing Col. Steering
10	175121	Draglink
11	STD551137	Washer, Lock
12	73940800	Nut Hex Jam Toplock 1/2-20 unf
13	136518	Spacer Bearing Axle Front
15	145212	Nut, Hex Flange Lock
17	180641	Shaft Assembly, Steering
26	126847X	Bushing, Link, Drag
28	19131416	Washer 13/32 x 7/8 x 16 Ga.
29	17000612	Screw 3/8-16 x 3/4
30	STD561210	Pin Cotter
32	130465	Rod, Tie
36	155099	Bushing, Steering
37	152927	Screw
38	139769	Insert, Steering Wheel
39	19183812	Washer 9/16 x 2-3/8 12 Ga.
40	73540600	Nut Crownlock 3/8-24
41	186737	Adaptor, Steering Wheel
42	145054X428	Boot, Steering Shaft
43	121749X	Washer 25/32 x 1-1/4 x 16 Ga.
44	180640	Extension Shaft Steering LR.LT
46	121232X	Cap, Spindle
51	73540400	Nut Crownlock 1/4-28
54	71130420	Bolt Hex 1/4-28 unf x 1-1/4 Gr. 8
65	160367	Spacer Brace Axle
67	72110618	Bolt RDHD Sqnk 3/8-16 x 2-1/4
68	169827	Axle, Brace
71	175146	Steering Asm.
82	169835	Bracket Susp. Chassis Front
88	175118	Bolt Shoulder 7/16-20 unc
91	175553	Clip Steering
95	188967	Washer Hardened

NOTE: All component dimensions given in U.S. inches
1 inch = 25.4 mm

REPAIR PARTS

TRACTOR- -MODEL NO. 917. 277411

SEAT ASSEMBLY

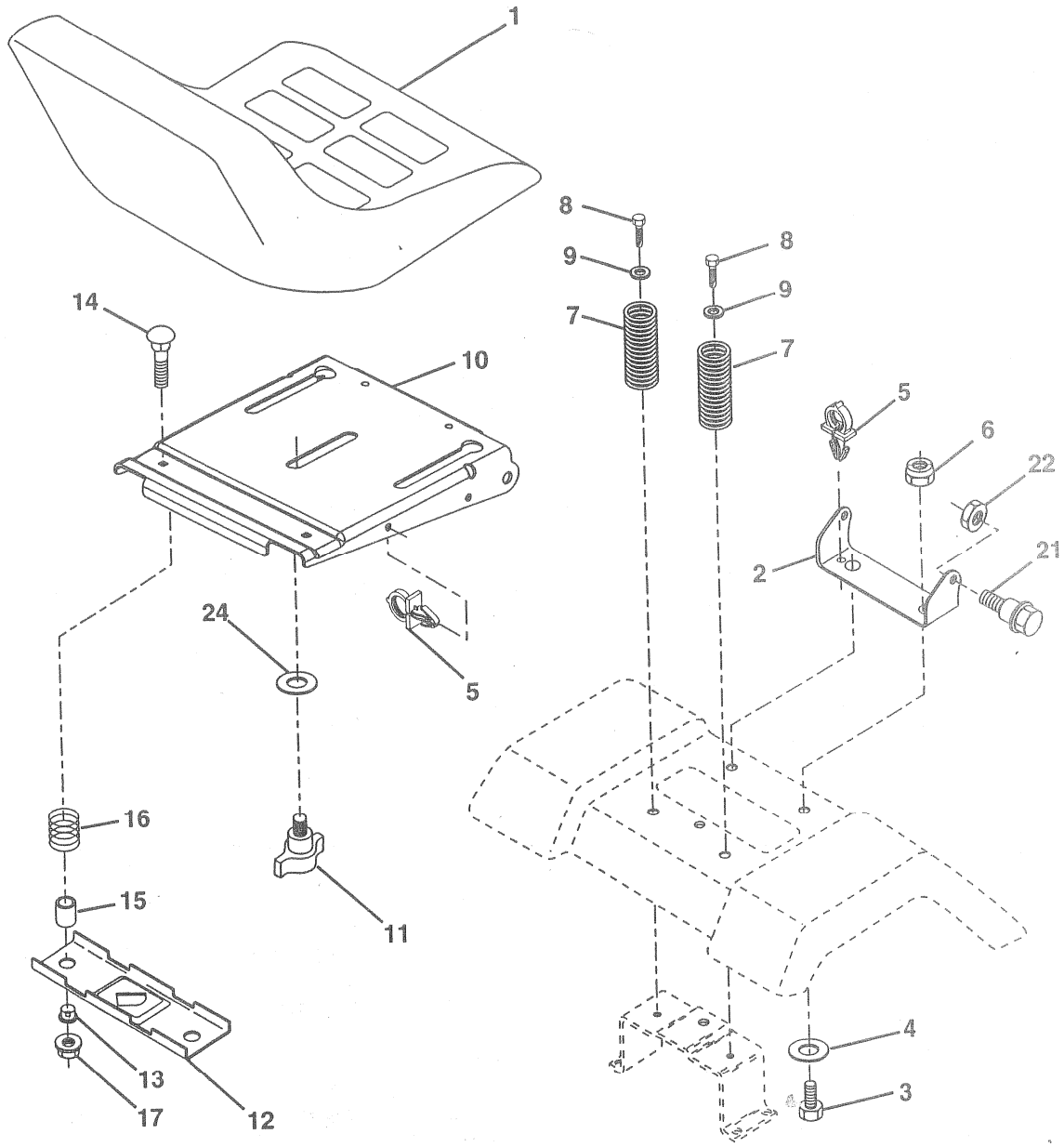

seat_lt.knob_9

KEY NO.	PART NO.	DESCRIPTION
1	188716	Seat
2	180166	Bracket Pivot Seat
3	71110616	Bolt Fin Hex 3/8-16 unc x 1
4	19131610	Washer 13/32 x 3/4 x 10 Ga.
5	145006	Clip Push In Hinged
6	STD541437	Nut Hex Lock w/Ins 3/8-16 unc
7	124181X	Spring Seat Cprsn 2 250 Blk Zi
8	17000616	Screw 3/8-16 x 1
9	19131614	Washer 13/32 x 1 x 14 Ga.
10	180186	Pan Seat
11	166369	Knob Seat Adj Wingnut
12	121246X	Bracket Pnt Mounting Switch

KEY NO.	PART NO.	DESCRIPTION
13	121248X	Bushing Snap Blk Nyl 50 Id
14	72050412	Bolt Rdhd Sht Nk 1/4-20 x 1-1/2
15	134300	Spacer Split 28 x 96 Zinc
16	121250X	Spring Cprsn 1 27 Blk Pnt
17	123976X	Nut Lock 1/4 Lge Flg Gr. 5 Zinc
21	171852	Bolt Shoulder 5/16-18 unc-2A
22	STD541431	Nut Hex Lock w/Ins 5/16-18
24	19171912	Washer 17/32 x 1-3/16 x 12 Ga.

NOTE: All component dimensions given in U.S. inches
1 inch = 25.4 mm

REPAIR PARTS

TRACTOR- -MODEL NO. 917. 277411

DECALS

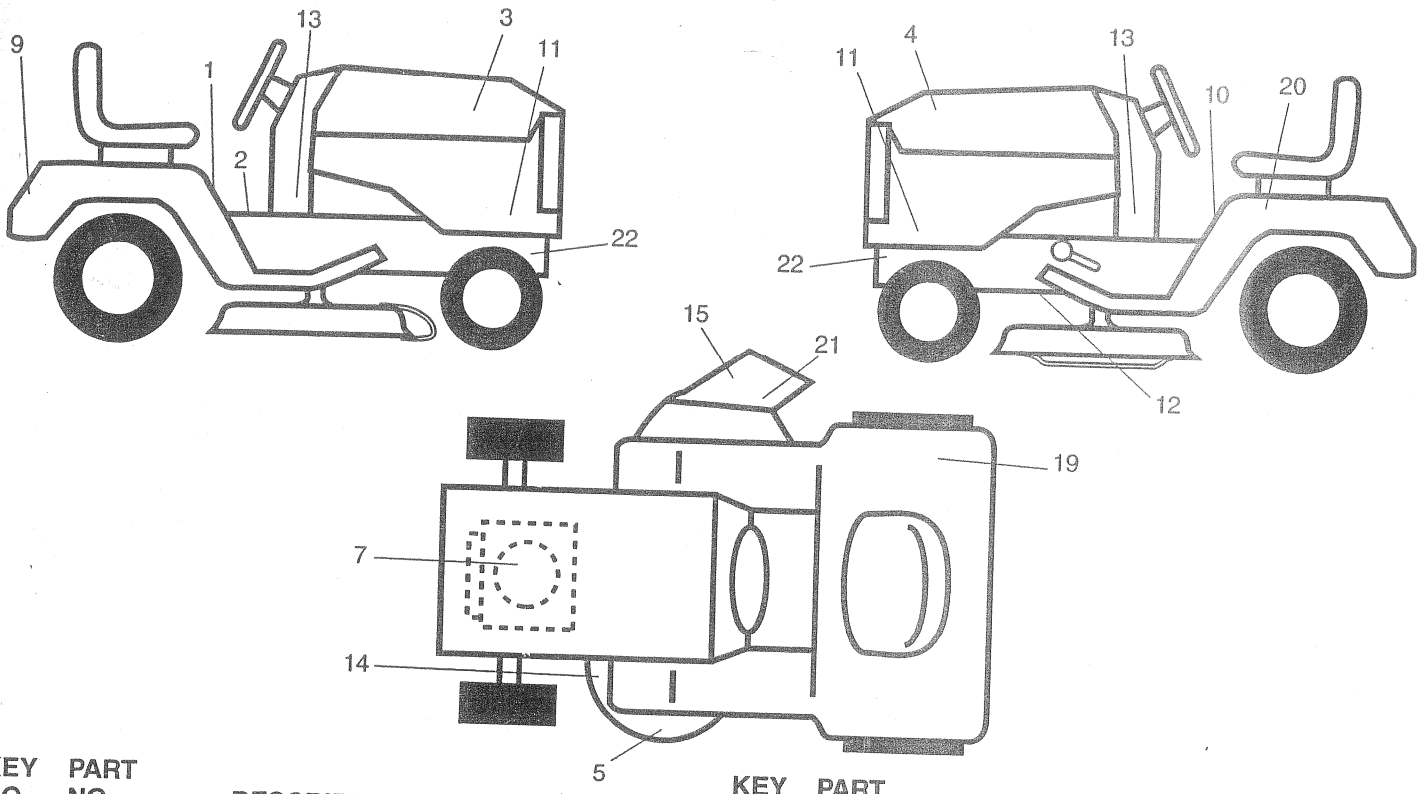

KEY NO.	PART NO.	DESCRIPTION
1	140837	Decal, Brake Parking Saddle
2	145498	Decal, Read Owners Manual
3	184728	Decal, Hood, R.H.
4	184729	Decal, Hood, L.H.
5	172331	Decal, Mower SRS. Heavy Duty
7	186377	Decal, HP Engine
9	184899	Decal, Fender, Craftsman
10	159737	Decal, Brake Clutch
11	184730	Decal, Panel Side
12	146046	Decal, V-Belt Drive Schematic
13	186787	Decal, Dash Panel
14	160396	Decal, V-Belt Schematic
15	179128	Decal, Deck B 42"
19	180432	Decal, DBA
20	145005	Decal, Battery Dngr
21	182166	Decal, Cutfinger
22	159736	Decal, Hot Muffler
- -	138311	Decal, Lift Handle
- -	166960	Decal, By pass
- -	162598	Decal, Draw Bar Load Limit
- -	184310X428	Pad, Footrest LH STLT
- -	184311X428	Pad, Footrest RH STLT
- -	**192513**	Manual, Operator's (Euro)
- -	**192514**	Manual, Operator's (Scand)
- -	**192515**	Manual Parts

WHEELS & TIRES

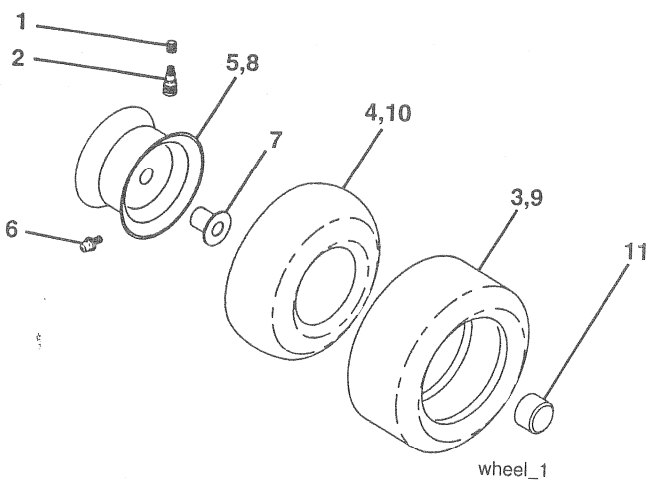

wheel_1

KEY NO.	PART NO.	DESCRIPTION
1	59192	Cap Value Tire
2	65139	Stem Value
3	106222X	Tire F Ts 15 x 6 0 - 6 Service
4	59904	Tube Inner Front #35060
5	106732X624	Rim Asm 6" front White Service
6	278H	Fitting Grease
7	9040H	Bearing Flange
8	106108X624	Rim Asm 8" rear White Service
9	106268X	Tire R. TS. 18 x 9.5-8 C. Service
10	7152J	Tube Rear 9 5 x 8 Service
11	104757X428	Cap Axle Blk 1 50 x 1 00
- -	144334	Sealant, Tire (10 oz. tube)

NOTE: All component dimensions given in U.S. inches
1 inch = 25.4 mm

REPAIR PARTS

TRACTOR- -MODEL NO. 917. 277411

ENGINE

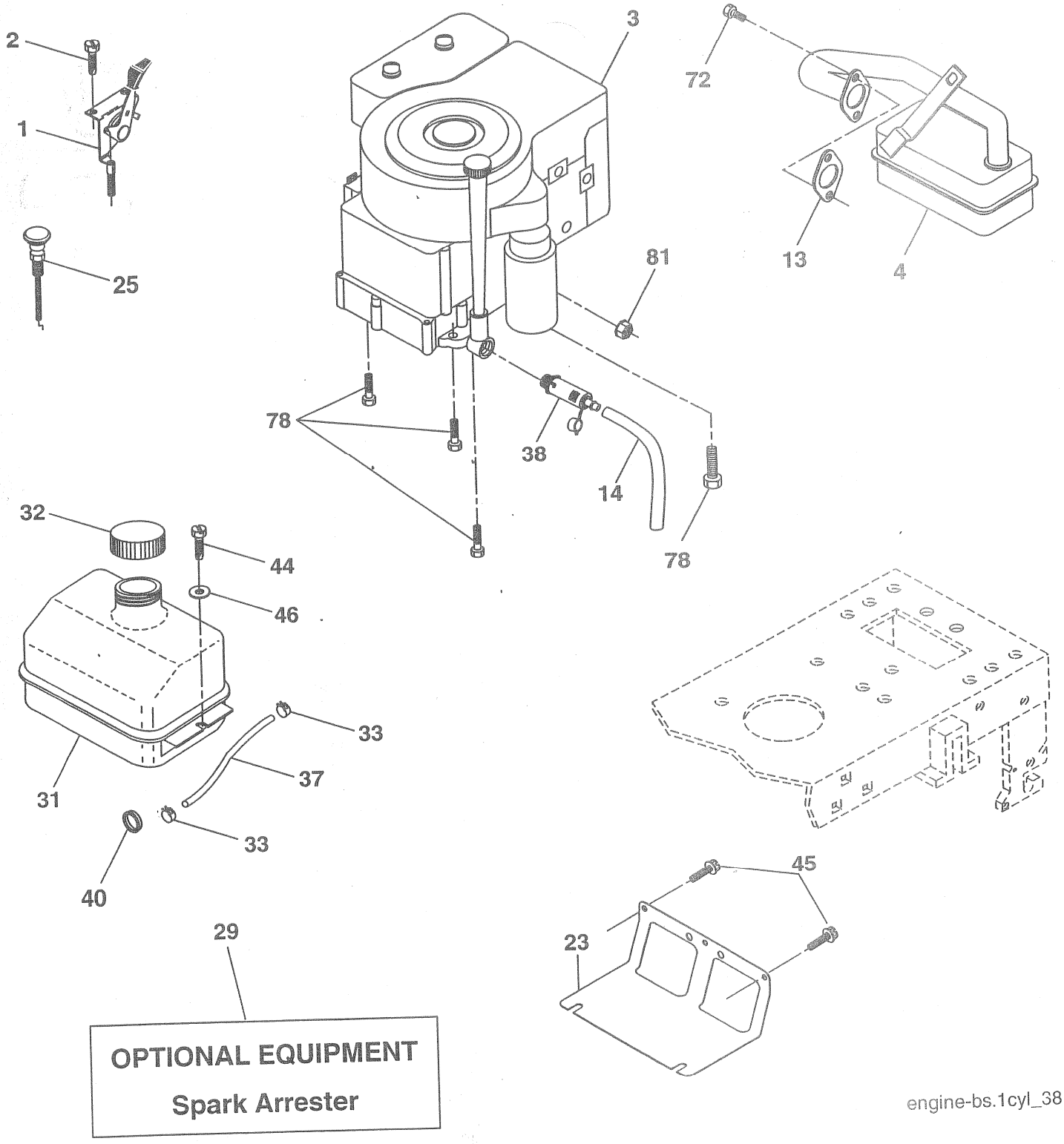

REPAIR PARTS

TRACTOR- -MODEL NO. 917. 277411

ENGINE

KEY NO.	PART NO.	DESCRIPTION
1	170545	Control, Throttle
2	17720408	Screw, Hex Head, Thread Cutting 1/4-20 x 1/2
3	- - - - - -	Engine, (See Breakdown) Briggs Model 31C707-0240-E1
4	137352	Muffler
13	165291	Gasket
14	148456	Tube Drain Oil Easy
23	169837	Shield Brn/Dbr Guard
25	**187770X428**	Control Choke
29	137180	Arrestor, Spark
31	184900	Tank, Fuel
32	140527	Cap Assembly, Fuel Sears, Vented
33	123487X	Clamp, Hose
37	137040	Line, Fuel
38	181654	Plug Drain Oil Easy
40	124028X	Bushing, Snap, Fuel Line
44	17670412	Screw, Hex Washer Head, Thd., Roll. 1/4-20 x 3/4
45	17000612	Screw Hxwsh Thdr 3/8-16 x 3/4
46	19091416	Washer 9/32 x 7/8 x 16 Ga.
72	183906	Screw Socket Head 5/16-18 x 1
78	17060620	Screw 3/8-16 x 1-1/4
81	73510400	Nut Keps Hex 1/4-20

NOTE: All component dimensions given in U.S. inches
1 inch = 25.4 mm

REPAIR PARTS

TRACTOR- -MODEL NO. 917. 277411

MOWER LIFT

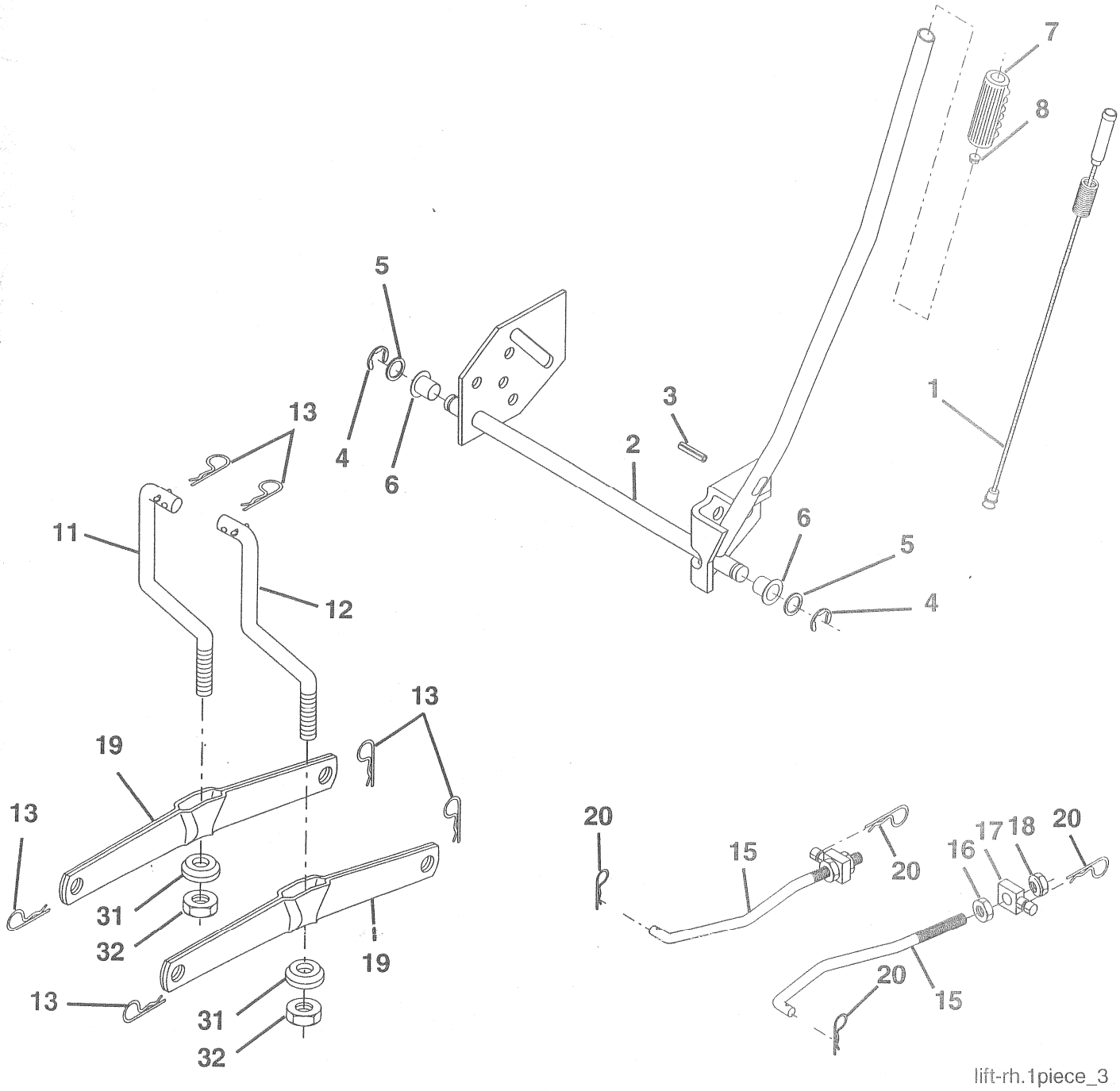

lift-rh.1piece_3

MOWER LIFT

KEY NO.	PART NO.	DESCRIPTION
1	159460	Washer Asm Inner Spring W/Plunger
2	159471	Shaft Asm. Lift
3	105767X	Pin Groove
4	12000002	E Ring #5133-62
5	19211621	Washer 21/32 x 1 x 21 Ga.
6	120183X	Bearing Nylong
7	125631X	Grip Handle Fluted
8	122365X	Button Plunger Read
11	139865	Link Asm Lift L.H.
12	139866	Link Asm Lift R.H.
13	STD624008	Retainer Spring
15	173288	Link Front
16	73350800	Nut Jam Hex 1/2-13 unc
17	175689	Trunnion Blk Zinc
18	73800800	Nut Lock w/Wsh 1/2-13 unc
19	139868	Arm Suspension Mower
20	163552	Retainer Spring
31	169865	Bearing, Pvt. Lift
32	73540600	Nut Crownlock 3/8-24

NOTE: All component dimensions given in U.S. inches
1 inch = 25.4 mm

REPAIR PARTS

TRACTOR- -MODEL NO. 917. 277411

MOWER

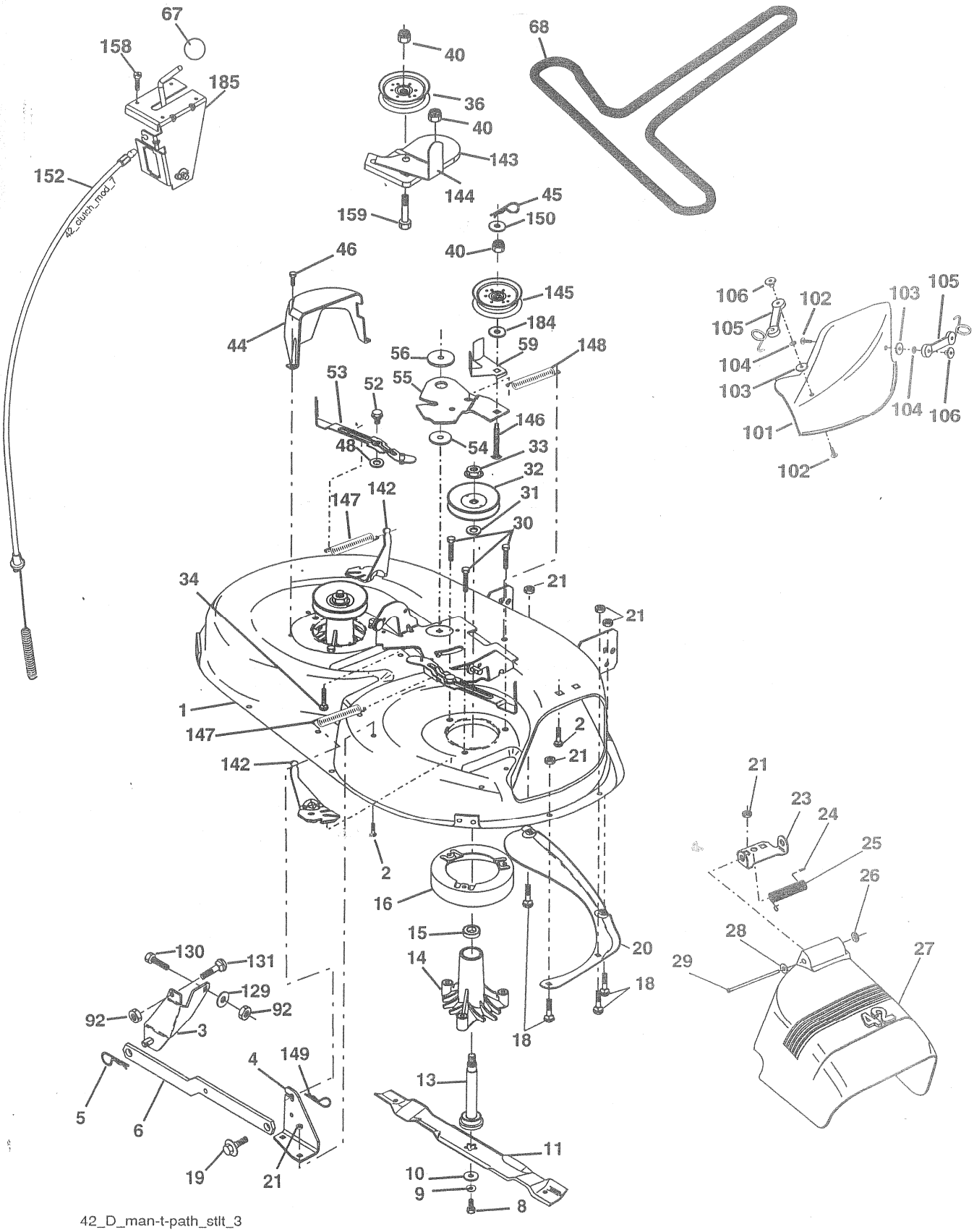

REPAIR PARTS

TRACTOR- -MODEL NO. 917. 277411

MOWER

KEY NO.	PART NO.	DESCRIPTION
1	165892	Mower Deck Assembly, 42"
2	STD533107	Bolt
3	138017	Bracket Assembly,Sway Bar, Front
4	165460	Bracket Sway Bar 38/42" Deck
5	STD624008	Retainer Spring
6	178024	Bar Sway Deck
8	850857	Bolt, Hex 3/8-24 x 1.25 Gr. 8
9	STD551137	Washer, Lock
10	140296	Washer, Hardened
11	134149	Blade,
13	137645	Shaft Assembly, Mandrel, Vented
14	128774	Housing, Mandrel, Vented
15	110485X	Bearing, Ball, Mandrel
16	174493	Stripper, Vented Mower Deck
18	72140505	Bolt, Carriage 5/16-18 x 5/8
19	132827	Bolt, Shoulder
20	159770	Baffle, Vortex
21	STD541431	Nut Crownlock 5/16-18 unc
23	177563	Bracket, Deflector
24	105304X	Cap, Sleeve
25	123713X	Spring, Torsion, Deflector
26	110452X	Nut, Push
27	130968X428	Shield, Deflector
28	19111016	Washer 11/32 x 5/8 x 16 Ga.
29	131491	Rod, Hinge
30	173984	Screw Thdrol Washer Head
31	187690	Washer, Spacer
32	153535	Pulley, Mandrel
33	178342	Nut, Toplock, Flanged
34	STD533717	Bolt
36	131494	Pulley, Idler, Flat
40	73900600	Nut Lock 3/8-16
44	140088	Guard, Mandrel, L.H.
45	STD624003	Retainer
46	137729	Screw, Thd. Roll 1/4-20 x 5/8
48	133944	Washer, Hardened
52	139888	Bolt, Shoulder 5/16-18 unc
53	184907	Arm Assembly, Pad, Brake
54	178515	Washer, Hardened
55	155046	Arm, Idler
56	165723	Spacer, Retainer
59	141043	Guard, TUV Idler
67	184939	Knob Custom Oval
68	180215	V-Belt
92	STD541437	Nut
101	136420	Mulcher Cover
102	71081010	Screw
103	19061216	Washer #10
104	STD551110	Washer, Lock
105	160793	Latch Assembly, Bagger
106	2029J	Nut, Weld
129	19131312	Washer 13/32 x 13/16 x 12 Ga.
130	STD523710	Bolt, Fin Hex 3/8-16 unc x 1 Gr. 5
131	STD533710	Bolt, Rdhd Sqnk 3/8-16 unc x1
142	165890	Arm Spring Brake Mower
143	157109	Bracket Arm Idler 42"
144	158634	Keeper Belt 42" Clutch Cable
145	165888	Pulley Idler Flat
146	171977	Bolt Carriage Idler
147	179748	Spring Extension
148	169022	Spring Return Idler
149	165898	Retainer Spring Yellow Zinc
150	19091210	Washer 9/32 x 3/4 x 10 Ga.
152	181555	Cable Clutch 42 In
158	17720408	Screw Hex Thd Cut 1/4-20 x 1/2
159	72140614	Bolt Rdhd Sqn 3/8-16 unc x 3/4
184	19131410	Washer 13/13 x7/8 x 10 Ga.
185	188234	Head Asm Cable Clutch
- -	130794	Mandrel Assembly (Includes Housing, Shaft and Shaft Hardware Only - Pulley Not Included)
- -	181268	Replacement Mower, Complete (Std. Deck-Order separately mulcher cover components key nos. 101 - 106).

NOTE: All component dimensions given in U.S. inches
1 inch = 25.4 mm

REPAIR PARTS

TRACTOR- -MODEL NO. 917. 277411

DANA TRANSAXLE - MODEL NUMBER D4360-140

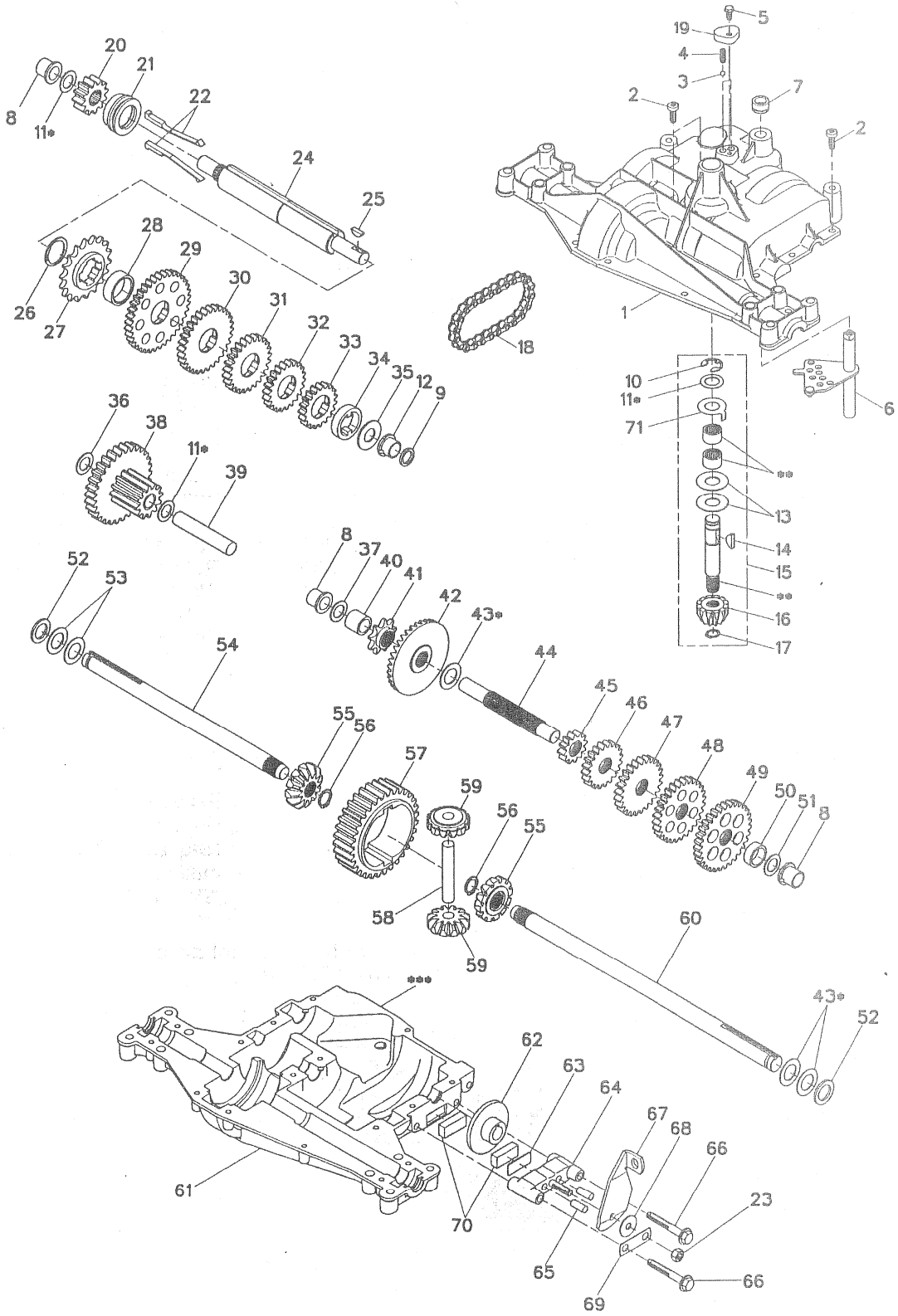

REPAIR PARTS

TRACTOR- -MODEL NO. 917. 277411

DANA TRANSAXLE - MODEL NUMBER D4360-140

KEY NO.	PART NO.	DESCRIPTION
1	170981	Housing, Upper
2	2274J	Screw, Tapping, 1/4-20 X .734
3	134400	Ball, Detent
4	105904X	Spring, Detent
5	160940	Screw, Tapping, No. 10-24 X .482
6	138235	Assy, Kit, Shifter
7	108727X	V-Ring
8	148266	Bearing, Flange
9	148269	Seal, Oil
10	2225J	Ring, Retaining
11	134793	* Assy, Kit, Shim, .625 Shaft
12	148268	Bearing, Flange
13	120415X	Washer, Plain, .632 X 1.38 X .046
14	142674	Key, Woodruff, No. 9
15	170983	Assy, Kit, Input Shaft
16	170986	Pinion, Bevel, 12T
17	105909X	Ring, Retaining
18	105910X	Chain, 24 Pitches
19	160942	Cover, Detent
20	160943	Gear, Spur, 1 2T
21	148267	Collar, Clutch
22	138236	Assy, Kit, Clutch Keys
23	73810500	Nut, Lock, 5/16-24
24	142676	Shaft, Intermediate
25	2244J	Key, Woodruff, No. 61
26	105916X	Ring, Retaining
27	12047OX	Sprocket, 1 8T
28	110070X	Spacer, 1. 131 X 1.45 X .494
29	142677	Gear, Spur, 37T
30	124644X	Gear, Spur, 30T
31	108980X	Gear, Spur, 25T
32	120406X	Gear, Spur, 22T
33	134796	Gear, Spur, 1 9T
34	134797	Spacer, 1. 133 X 1.50 X .375
35	105925X	Washer, Plain, .640 X 1.37 X .061
36	2228J	Washer, Plain, .632 X 1.00 X .046
37	170987	Washer, Plain, .632 X 1.00 X .031
38	174255	Assy, Gear, Comb., 12T & 30T
39	124639X	Shaft, Idler
40	120472X	Spacer, .633 X .87 X .755

KEY NO.	PART NO.	DESCRIPTION
41	105928X	Sprocket, 9T
42	170988	Gear, Bevel, 36T
43	134394	* Assy, Kit, Shim, .750 Shaft
44	120473X	Shaft, Drive
45	142678	Gear, Spur, 12T
46	124641 X	Gear, Spur, 20T
47	106589X	Gear, Spur, 25T
48	120408X	Gear, Spur, 28T
49	105937X	Gear, Spur, 31T
50	105936X	Spacer, .781 X 1.00 X .375
51	2226J	Washer, Plain, .632 X 1.00 X .060
52	134401	Washer, Neoprene
53	2264J	Washer, Plain, .758 X 1.25 X .031
54	160946	Axle, LH
55	170990	Gear, Miter, T, Splined
56	160948	Ring, Retaining
57	110071X	Gear, Spur, 32T
58	120952X	Shaft, Cross
59	170991	Gear, Miter, 1 2T, Idler
60	160950	Axle, RH
61	170992	Housing, Lower
62	7294J	Disc, Brake
63	108989X	Spacer, Brake Puck
64	160952	Jaw, Brake
65	120954X	Pin, Dowel
66	160953	Screw, Tapping, 5/16-18 X 2.35
67	138244	Lever, Actuating
68	108996X	Washer, Plain, .321 X 1.00 X .055
69	160954	Bracket, Anti-Rotation
70	120951X	Puck, Friction
71	174256	Washer, Anti Rotation
72	120416X	Grease

NOTE: All componen. dimensions given in U.S. inches
1 inch = 25.4 mm

* Use in various combinations to maintain proper clear ances.

* * Order Key No. 15.

* * * Silicone Sealant to be applied between Upper and Lower Housings (use Loctite Ultra Gray Silicone 5699 or equivalent).