CRAFTSMAN

MC 155 F

MODELE

256340

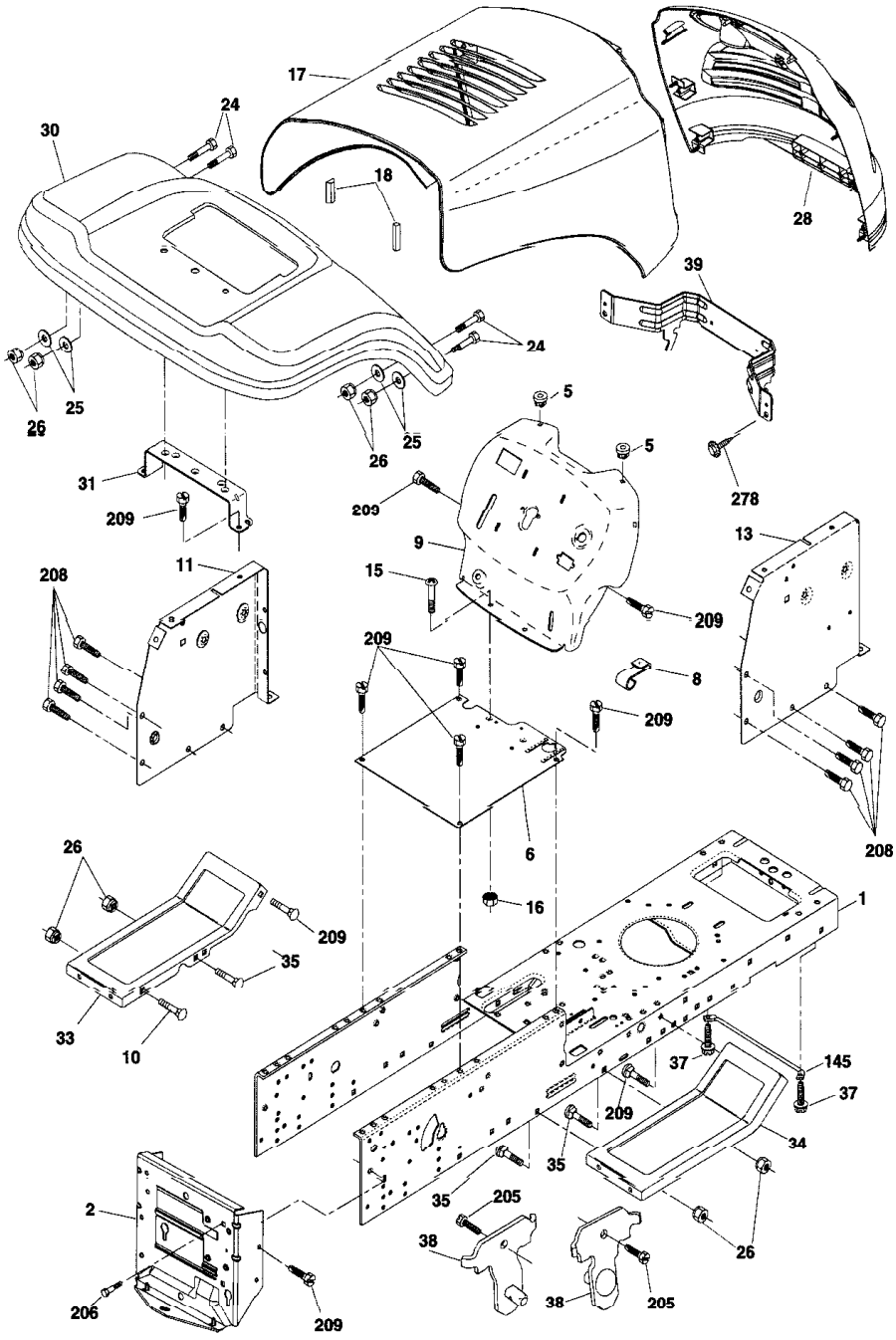
17
24
30
18
28
39
24
25
26
25
26
5
5
31
209
209
278
9
13
11
208
15
209
209
8
209
6
208
26
16
1
209
35
33
10
37
145
37
209
34
35
35
205
2
38
26
206
209
38
205

CHASSIS

REPERE	REF	DESIGNATION
1	174620	CHASSIS STAMPING
2	176554	DRAWBAR
5	155272	BUMPER HOOD/DASH
6	184419	SADDLE FLAT
8	155138	CLIP RETAINER
9	193518X012	DASH
10	STD533710	BOLT, CARRIAGE 3/8-16 X 1
11	174996	PANEL, DASH, L.H.
13	172105X010	PANEL, DASH, R.H.
15	74180512	SCREW MACH TRHD 5/16-18 UNC X 3/4
16	73510500	NUT KEPS 5/16-18
17	187559X613	HOOD ASSEMBLY
18	184921	BUMPER HOOD LARGE 1.75
24	STD523710	BOLT FIN HEX 3/8-16 UNC X 1 GR. 5
25	19131312	WASHER 13/32 X 13/16 X 12 GA.
26	STD541437	NUT
28	187566X428	GRILLE
30	192525X613	FENDER
31	136619	BRACKET, FENDER SUPPORT
33	179716X613	FOOTREST LH
34	179717X613	FOOTREST RH
35	STD533707	BOLT RDHD SHT SQNK 3/8-16 X 3/4
37	17490508	SCREW THDROL 5/16-18 X TYT
38	175710	BRACKET ASSEMBLY PIVOT MOWER REAR
39	187568	BRACKET PIVOT
145	409167	ROD PIVOT CHASSIS/HOOD
205	17490608	SCREW THDROL 3/8-16 X 1/2
206	170165	BOLT SHOULDER 5/16-18 TT
208	17670608	SCREW THDROL 3/8-16 X 1/2
209	17000612	SCREW HEX WSH THDR 3/8-16 X 3/4
278	191611	SCREW 10 X 3/4 SINGLE HEAD-HEX
NI01	5479J	PLUG, BUTTON
NI02	193640X428	PLUG SWITCH LIGHT
NI03	162598	DECAL, DRAWBAR LOAD LIMIT
NI04	138311	DECAL, LIFT HANDLE
NI05	412790	MANUAL, OPERATOR'S EURO
NI06	412786	MANUAL, PARTS
NI07	144334	SEALANT, TIRE (10 OZ. TUBE)
NI08	192558	BRAKE ASSEMBLY
NI09	192870	MANDREL ASSEMBLY (INCLUDES HOUSING-SHAFT AND SHAFT HARDWARE ONLY-PULLEY NOT INCLUDED)
NI10	193646	REPLACEMENT MOWER, COMPLETE

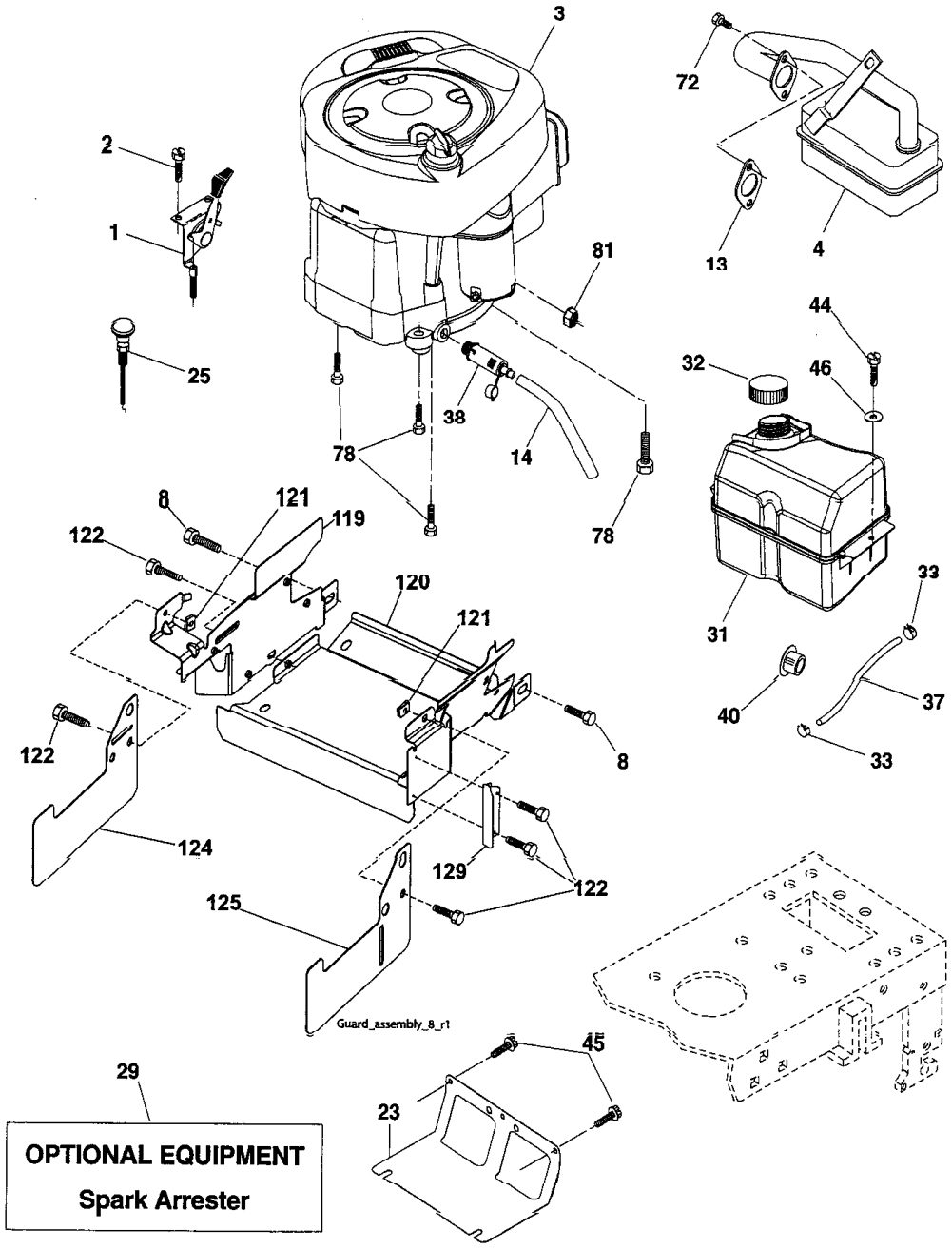

Engine Power Rating Information

The gross power rating for individual gas engine models is labeled in accordance with SAE (Society of Automotive Engineers) code J11940 (Small Engine Power & Torque Rating Procedure), and rating performance has been obtained and corrected in accordance with SAE J1995 (Revision 2002-5). Actual gross engine power will be lower and is affected by, among other things, ambient operating conditions and engine-to-engine variability. Given both the wide array of products on which engines are placed and the variety of environmental issues applicable to operating the equipment, the gas engine will not develop the rated gross power when used in a given piece of power equipment (actual "on-site" or net horsepower). This difference is due to a variety of factors including, but not limited to, accessories (air cleaner, exhaust, charging, cooling, carburetor, fuel pump, etc.), application limitations, ambient operating conditions (temperature, humidity, altitude), and engine-to-engine variability. Due to manufacturing and capacity limitations, Briggs & Stratton may substitute an engine of higher rated power for this Series engine.

REPERE	REF	DESIGNATION
1	170545	CONTROL, THROTTLE/CHOKE
2	17720408	SCREW, HEX HEAD, THREAD CUTTING 1/4-20 X 1/2
3	N/P	ENGINE, BRIGGS MODEL NO. 31A607-0740-B1 (SEE ENGINE BREAKDOWN)
4	137352	MUFFLER
8	171877	BOLT 5/16-18 UNC X 3/4
13	165291	GASKET
14	148456	TUBE DRAIN OIL EASY
23	169837	SHIELD BRN/DBR GUARD
25	187770X428	CONTROL CHOKE
29	137180	ARRESTOR, SPARK
31	407516	TANK, FUEL
32	197725	CAP ASSEMBLY, FUEL
33	123487X	CLAMP, HOSE
37	137040	LINE, FUEL
38	181654	PLUG, DRAIN OIL EASY
40	124028X	BUSHING SNAP
44	17670412	SCREW, HEX WASHER HEAD, THD., ROLL. 1/4-20 X 3/4
45	17000612	SCREW HEX WSH THDR 3/8-16 X 3/4
46	19091416	WASHER 9/32 X 7/8 X 16 GA.
72	192334	SCREW SOCKET HEAD CAP 5/16-18 X 3/4
78	17060620	SCREW 3/8-16 X 1-1/4
81	73510400	NUT KEPS HEX 1/4-20 UNC
119	197949	GUARD PULLEY LH
120	197948	GUARD PULLEY RH
121	196688	CLIPS THREADED
122	137729	SCREW THD ROLL 1/4-20 X 5/8
124	410520	SHIELD SIDE LH
125	410521	SHIELD SIDE RH
129	400328	GUARD PULLEY ENGINE ADAPTER

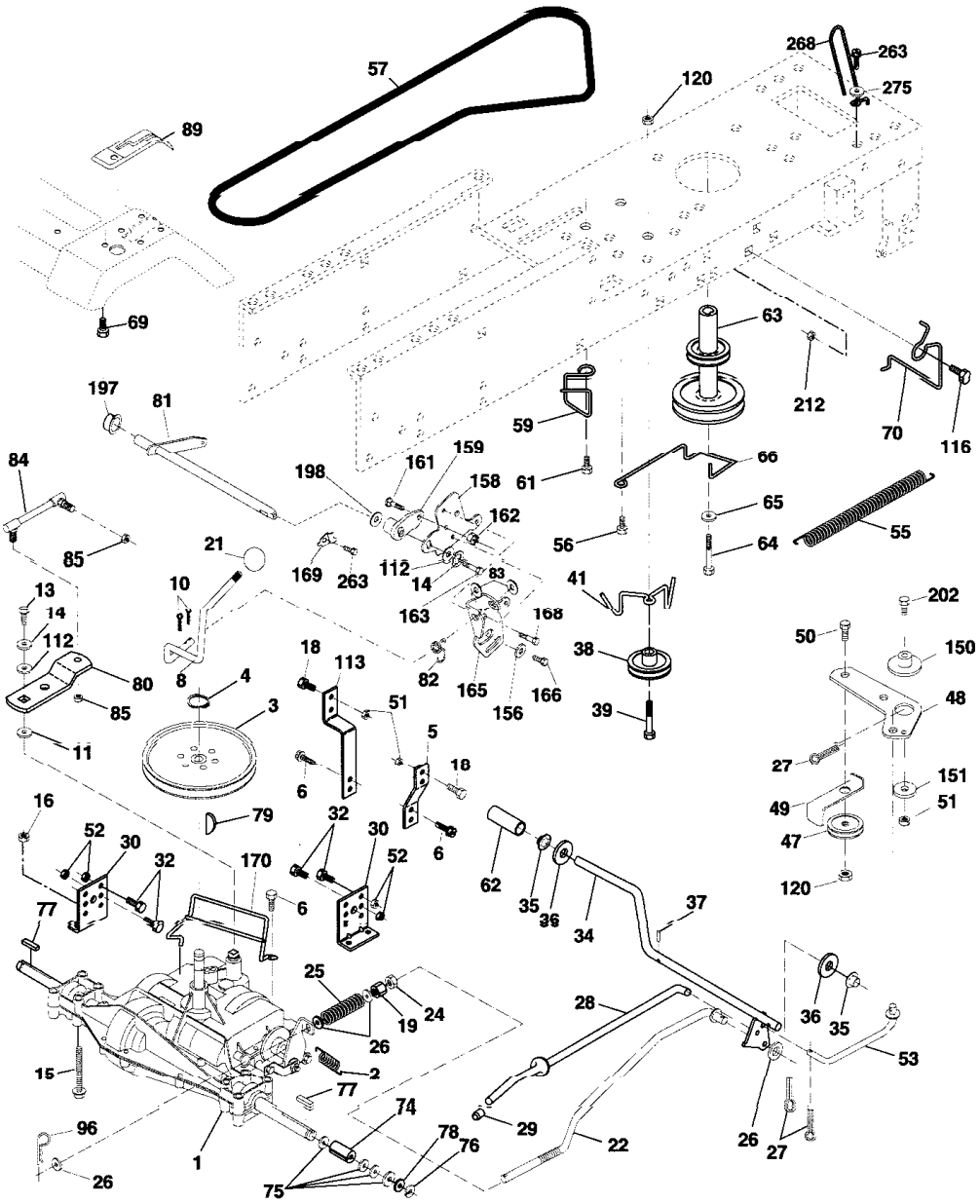

TRANSMISSION

REPERE	REF	DESIGNATION
1	N/P	TRANSAXLE PEERLESS 206-545C (SEE TRANSAXLE BREAKDOWN)
2	146682	SPRING BRAKE RETURN
3	123666X	PULLEY TRANSAXLE
4	12000028	RING RETAINER
5	121520X	STRAP TORQUE 30 DEGREES
6	17060512	SCREW 5/16-18 X 3/4
8	192706	ROD SHIFT FENDER ADJUST
10	STD561210	PIN COTTER 1/8 X 1 CAD
11	105701X	WASHER PLATE SHIFT
13	74550412	BOLT 1/4-28 UNF GR. 8 W/PATCH
14	STD551125	WASHER LOCK HVY HELICAL
15	74490544	BOLT HEX FLGHD 5/16-18 GR. 5
16	STD541431	NUT LOCK HEX W/INS. 5/16-18 UNC
18	STD523710	BOLT FIN HEX 3/8-16 X 1 GR. 5
19	STD541437	NUT LOCK HEX W/WSH 3/8-16 UNC
21	106933X	KNOB
22	130804	ROD, BRAKE
24	73350600	NUT, HEX JAM 3/8-16 UNC
25	106888X	SPRIN, BRAKE ROD
26	STD551037	WASHER 13/32 X 13/16 X 16 GA.
27	STD561210	PIN COTTER 1/8 X 3/4 CAD.
28	175765	ROD, PARKING BRAKE
29	71673	CAP, PARKING BRAKE
30	174973	BRACKET, TRANSAXLE
32	STD523107	BOLT HEX HD 5/16-18 UNC X 3/4
34	175578	SHAFT, FOOT PEDAL
35	120183X	BEARING, NYLON
36	19211616	WASHER
37	1572H	PIN, ROLL
38	179114	PULLEY, COMPOSITE, FLAT
39	STD533727	BOLT RDHD 3/8-16 UNC X 2-3/4 GR. 5
41	175556	KEEPER, BELT IDLER
47	127783	PULLEY, IDLER, V-GROOVE
48	154407	BELLCRANK, CLUTCH
49	123205X	RETAINER, BELT
50	72110612	BOLT HEX HD 3/8-16 X 1-1/2
51	STD541437	NUT CROWNLOCK 3/8-16 UNC
52	STD541431	NUT CROWNLOCK 5/16-18 UNC
53	199652	LINK, CLUTCH
55	105709X	SPRING, RETURN, CLUTCH
56	17060620	SCREW 3/8-16 X 1.04
57	138255	V-BELT
59	169691	KEEPER, CENTER SPAN
61	17120614	SCREW 3/8-16 X .875
62	8883R	COVER, PEDAL
63	175410	PULLEY, ENGINE
64	173937	BOLT HEX 7/16-20 X 4 GR. 5-1.5
65	STD551143	WASHER
66	154778	KEEPER BELT ENGINE HYDRO

REPERE	REF	DESIGNATION
69	142432	SCREW HEX WSH HI-LO 1/4 X 1/2
70	134683	KEEPER BELT ENGINE
74	137057	SPACER AXLE
75	121749X	WASHER 25/32 X 1-1/4 X 16 GA.
76	STD581075	E-RING
77	123583X	KEY, SQUARE
78	121748X	WASHER 25/32 X 1-5/8 X 16 GA.
79	2228M	KEY WOODRUFF
80	131486	ARM SHIFT
81	165594	SHAFT ASSEMBLY CROSS TAPERED
82	165711	SPRING TORSION
83	19171216	WASHER 17/32 X 3/4 X 16 GA.
84	166228	LINK TRANSAXLE
85	150360	NUT LOCK CENTER 1/4-20
89	192053X428	CONSOLE, SHIFT
96	STD624003	RETAINER SPRING 1" ZINC/CAD
112	19091210	WASHER 9/32 X 3/4 X 10 GA.
113	127285X	STRAP TORQUE 90 DEGREES
116	72140608	BOLT RDHD SQNECK 3/8-16 X 1.25
120	73900600	NUT LOCK FLG 3/8-16
150	175456	SPACER RETAINER
151	19133210	WASHER 13/32 X 2 X 10 GA.
156	166002	WASHER SRRTED 5/16 ID X 1.125
158	165589	BRACKET SHIFT MOUNT
159	183900	HUB TAPERED FLANGE SHIFT LT
161	72140406	BOLT RDHD SQNK 1/4-20 X 3/4 GR. 5
162	73680400	NUT CROWNLOCK 1/4-20 UNC
163	74780416	BOLT HEX FIN 1/4-20 UNC X 1 GR. 5
165	165623	BRACKET PIVOT LEVER
166	17490510	SCREW 5/16-18 X 5/8
168	165492	BOLT SHOULDER 5/16-18 X .561
169	165581	PLATE FASTENING
170	187414	KEEPER BELT T/A
197	169613	NYLINER SNAP-IN 5/8" ID
198	169845	WASHER NYLON
202	72110614	BOLT CARR SH 3/8-16 X 1-3/4 GR. 5
212	145212	NUT HEX FLG. LOCK
263	17000612	SCREW 3/8-16 X 3/4
268	182402	GUARD MUFFLER
275	19131614	WASHER 13/32 X 1 X 14 GA.

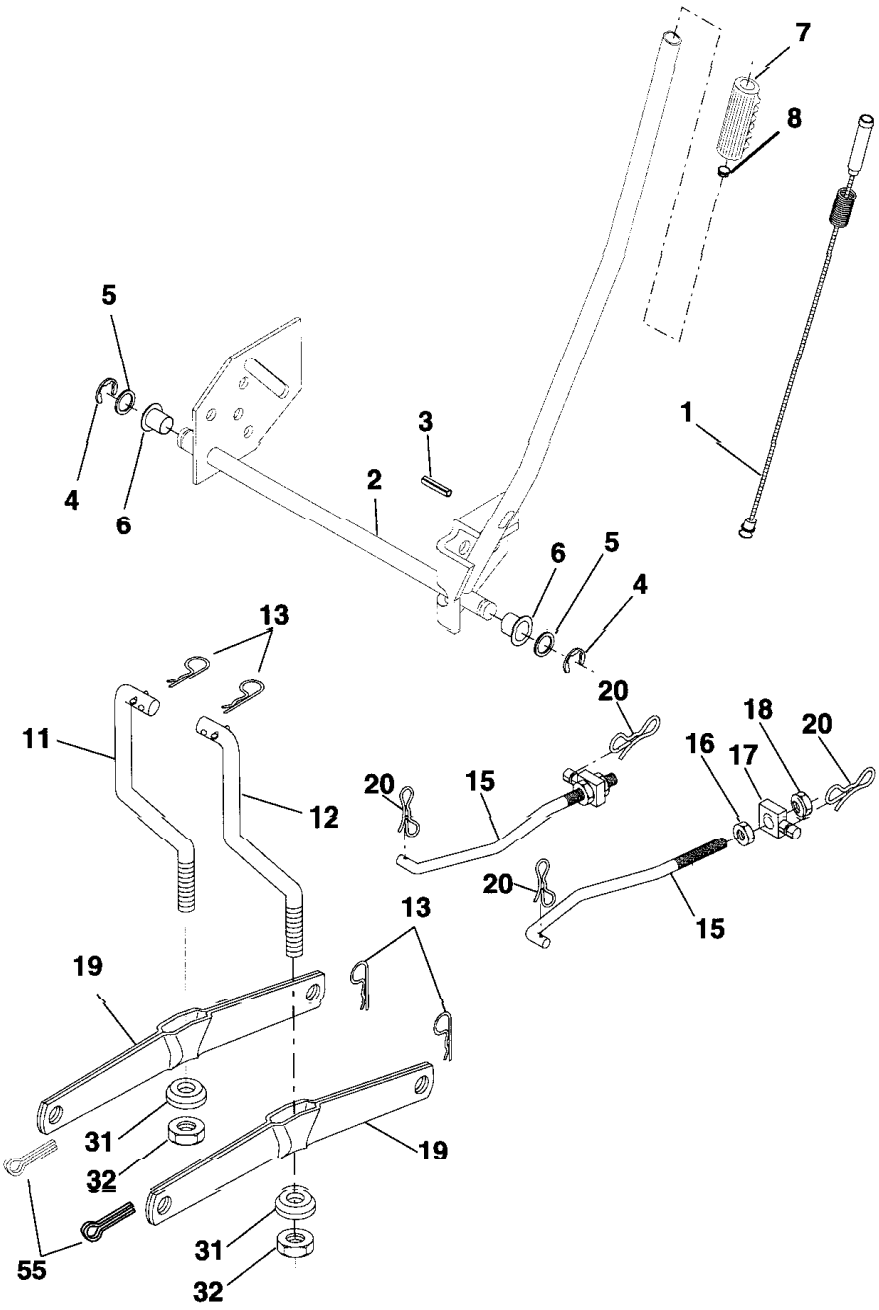

SYSTEME RELEVAGE

REPERE	REF	DESIGNATION
1	159460	LIFT LEVER INNER WIRE ASSEMBLY
2	159471	SHAFT ASSEMBLY, LIFT
3	105767X	PIN, GROOVE
4	12000002	E-RING
5	19211621	WASHER 21/32 X 1 X 21 GA.
6	120183X	BEARING, NYLON
7	125631X	GRIP, HANDLE, FLUTED
8	122365X	BUTTON, PLULNGER, RED
11	139865	LINK, LIFT, L.H.
12	139866	LINK, LIFT, R.H.
13	STD624008	RETAINER SPRING
15	173288	LINK, FRONT
16	73350800	NUT, HEX, JAM 1/2-13 UNC
17	175689	TRUNNION
18	73800800	LOCKNUT, HEX, WITH WASHER INSERT 1/2-13 UNC
19	139868	ARM, SUSPENSION, REAR
20	194209	PIN COTTER 7/16 BOW TIE LOCK
31	169865	BEARING, PVT, LIFT
32	73540600	NUT, CROWNLOCK 3/8-24
55	194208	PIN COTTER 5/16

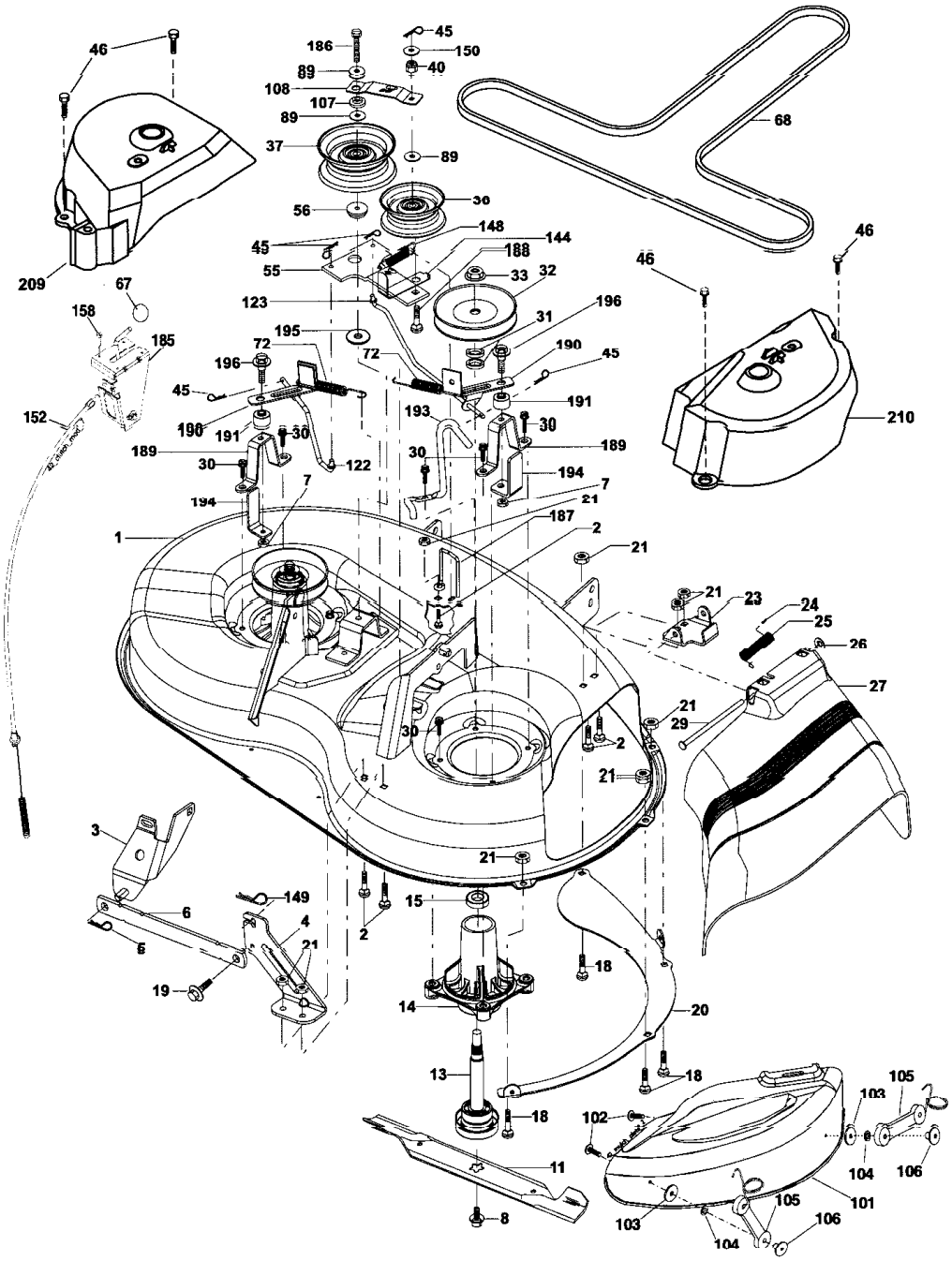

CARTER COUPE

REPERE	REF	DESIGNATION
1	192556	MOWER HOUSING ASSEMBLY
2	72140506	BOLT CARRIAGE 5/16-18 X 3/4
3	138017	BRACKET ASSEMBLY FR. SWAY BAR
4	192568	BRACKET DECK SWAY BAR 38"/42"
5	4939M	RETAINER SPRING
6	178024	BAR SWAY DECK
7	73800500	NUT LOCK HX/W INS 5/16-18
8	193003	BOLT 3/8-24 X 1.25 GR. 8
11	193957	BLADE MOWER
13	192872	SHAFT ASSEMBLY, MANDREL, VENTED (INCLUDES KEY NUMBER 6)
14	187281	HOUSING, MANDREL, VENTED
15	110485X	BEARING, BALL, MANDREL
18	72140505	BLADE RDHD SQNK 5/16-18 X 5/8
19	132827	BOLT, SHOULDER
20	400095	BAFFLE VORTEX FRONT
21	73680500	NUT
23	192557	BRACKET, MOWER DEFLECTOR
24	105304X	CAP, SLEEVE
25	197026	SPRING, TORSION, DEFLECTOR
26	110452X	NUT, PUSH
27	192572X428	SHIELD, DEFLECTOR
29	131491	ROD, HINGE
30	173984	SCREW THDROL.
31	187690	WASHER, SPACER
32	153532	PULLEY, MANDREL
33	400234	NUT, TOPLOCK
36	131494	PULLEY, IDLER, FLAT
37	193198	PULLEY, IDLER, FLAT
40	73680600	NUT, CROWNLOCK 3/8-16 UNC
45	4497H	RETAINER
46	137729	SCREW THD ROLL 1/4-20 X 5/8
55	133840	IDLER ARM ASSEMBLY
56	165723	SPACER, RETAINER
67	149846	KNOB CUSTOM OVAL
68	193214	V-BELT
72	193216	SPRING BRAKE RETURN
89	19131311	WASHER 13/32 X 13/16 X 11 GA.
101	192573	COVER MULCHING
102	71081010	SCREW PAN HD PHILLIP 10-24 X 5/8
103	19061216	WASHER #10
104	10071000	WASHER LOCK #10
105	160793	LATCH ASSEMBLY
106	2029J	NUT WELD
107	133502	SPACER RETAINER
108	133503	STIFFENER, IDLER ARM
122	410189	ROD, BRAKE LH LINK
123	410190	ROD, BRAKE RH LINK
144	193414	KEEPER BELT IDLER TENSION
148	169022	SPRING RETURN IDLER

REPERE	REF	DESIGNATION
149	165898	RETAINER SPRING YELLOW
150	19091210	WASHER 9/32 X 3/4 X 10 GA.
152	193235	CLUTCH CABLE 38"
158	17720408	SCREW HEX THD CUT 1/4-20 X 1/2
185	188234	HEAD ASSEMBLY CABLE CLUTCH
186	17490644	SCREW HEX WSH THDROL 3/8-16 X 2-3/4
187	193412	KEEPER BELT M SHAPE
188	165891	BOLT CARRIAGE IDLER
189	192559	BRAKE STAND
190	192560	BRAKE ARM
191	192561	BRAKE SPACER
193	193413	KEEPER BELT RH MANDREL
194	194105	BRAKE GUARD
195	19133210	WASHER 13/32 X 2 X 10 GA.
196	193782	BOLT WASHER ASSEMBLY 5/16-18
209	409256	COVER MANDREL LH
210	409257	COVER MANDREL RH

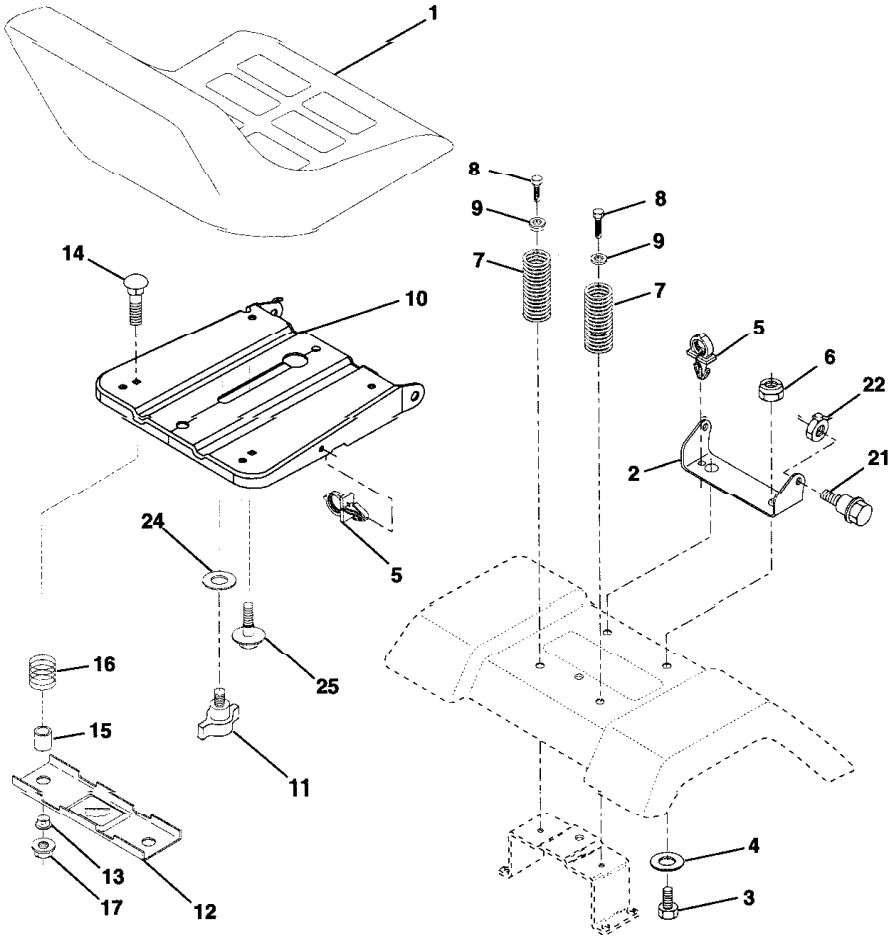

SIEGE

REPERE	REF	DESIGNATION
1	401042	SEAT
2	140551	BRACKET, PIVOT, SEAT
3	71110616	WASHER 13/32 X 1 X 10 GA.
4	19131610	WASHER 13/32 X 1 X 10 GA.
5	145006	CLIP, PUSH-IN HINGED
6	STD541437	NUT
7	124181X	SPRING, SEAT
8	17000616	SCREW 3/8-16 X 1-1/2
9	19131614	WASHER 13/32 X 1 X 14 GA.
10	195530	PAN, SEAT
11	166369	KNOB SEAT
12	174648	BRACKET, SWITCH MOUNTING
13	121248X	BUSHING, SNAP
14	72050412	BOLT, CARRIAGE 1/4-20 X 1-1/2
15	134300	SPACER, SPLIT .28 X .88
16	121250X	SPRING
17	123976X	LOCKNUT, FLANGE 1/4 GR. 5
21	171852	BOLT, SHOULDER 5/16-18 UNC
22	STD541431	NUT
24	19171912	WASHER 17/32 X 1-3/16 X 12 GA.
25	127018X	BOLT SHOULDER 5/16-18 X .62

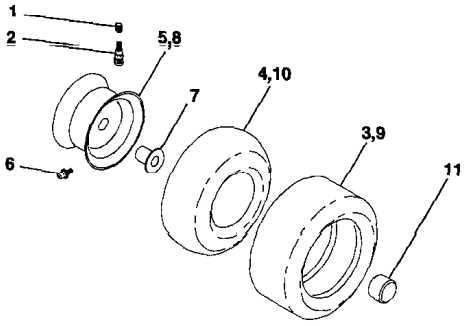

ROUE

REPERE	REF	DESIGNATION
1	59192	VALVE CAP, TIRE
2	65139	STEM, VALVE
3	124157X	TIRE, FRONT
4	59904	TUBE, FRONT TIRE (NOT PROVIDED, SERVICE ITEM ONLY)
5	106732X624	RIM, FRONT
6	278H	FITTING, GREASE (FRONT WHEEL ONLY)
7	9040H	BEARING, FLANGE (FRONT WHEEL ONLY)
8	106108X624	RIM, REAR
9	123969X	TIRE, REAR
10	7152J	TUBE, REAR TIRE (NOT PROVIDED, SERVICE ITEM ONLY)
11	104757X428	CAP, AXLE

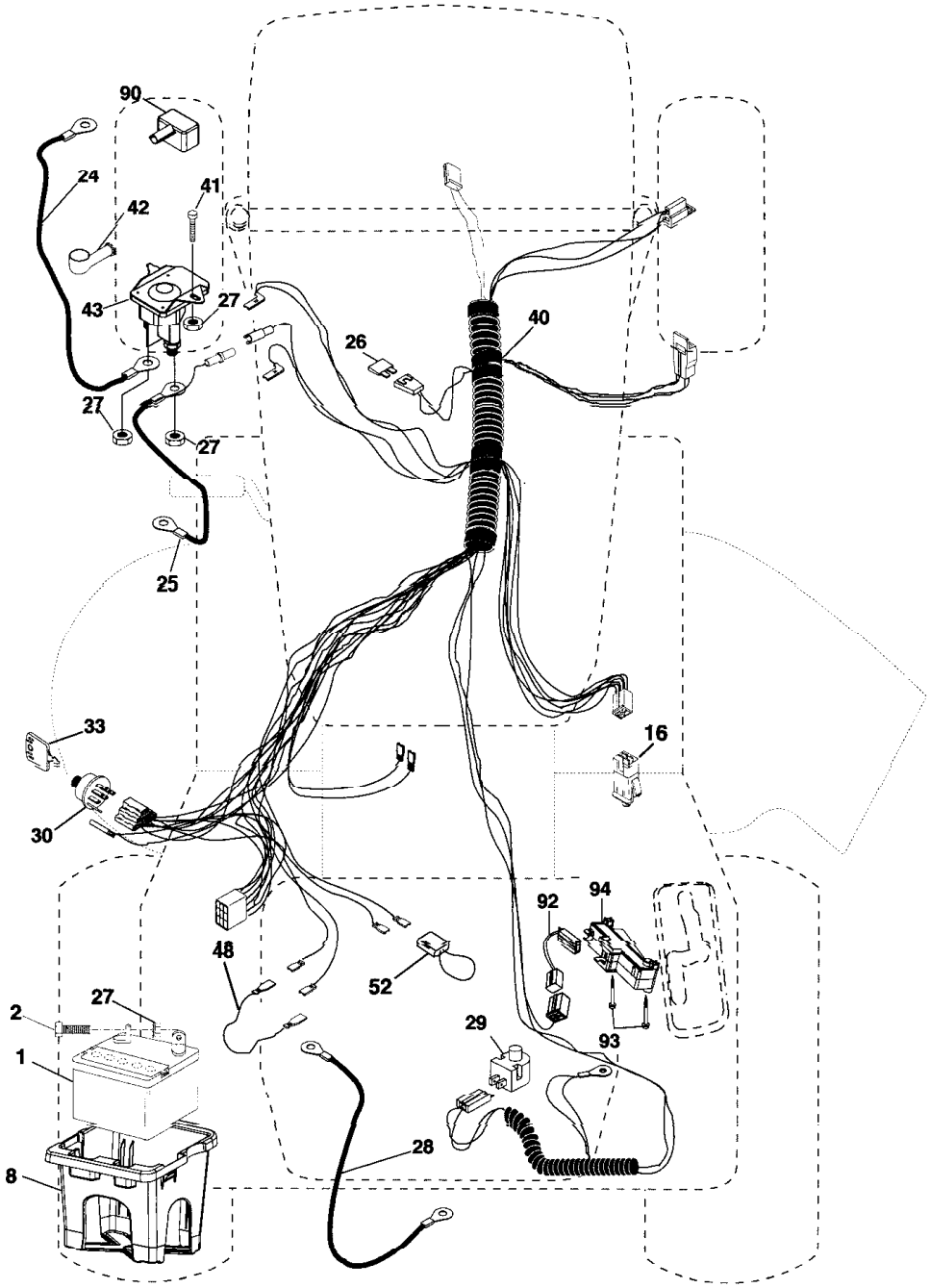

4/07

COMPOSANT ELECTRIQUE

REPERE	REF	DESIGNATION
1	163465	BATTERY
2	74760412	BOLT HEX HD 1/4-20 UNC X 3/4
8	176689	BOX BATTERY FENDER
16	176138	SWITCH, INTERLOCK
24	4799J	CABLE BATTERY 6 GA. 11" RED
25	146147	CABLE BATTERY 6 GA. W/16 WIRE RED
26	175158	FUSE 20 AMP
27	73510400	NUT, KEPS HEX 1/4-20 UNC
28	4207J	CABLE GROUND 6 GA. 12" BLACK
29	192749	SWITCH SEAT
30	193350	SWITCH IGN
33	140403	KEY IGN MOLDED CRAFTSMAN
40	197427	HARNESS IGN
41	71110408	BOLT BLK. FIN HEX 1/4-20 UNC X 1/2
42	131563	COVER TERMINAL RED
43	192507	SOLENOID
48	140844	ADAPTER AMMETER
52	141940	PROTECTION WIRE LOOP
90	180449	COVER BATTERY TERMINAL
92	196615	HARNESS PIGTAIL REVERSE SWITCH
93	192540	SCREW PLASTIC 10-14 X 2.0
94	191834	MODULE REVERSE ROS

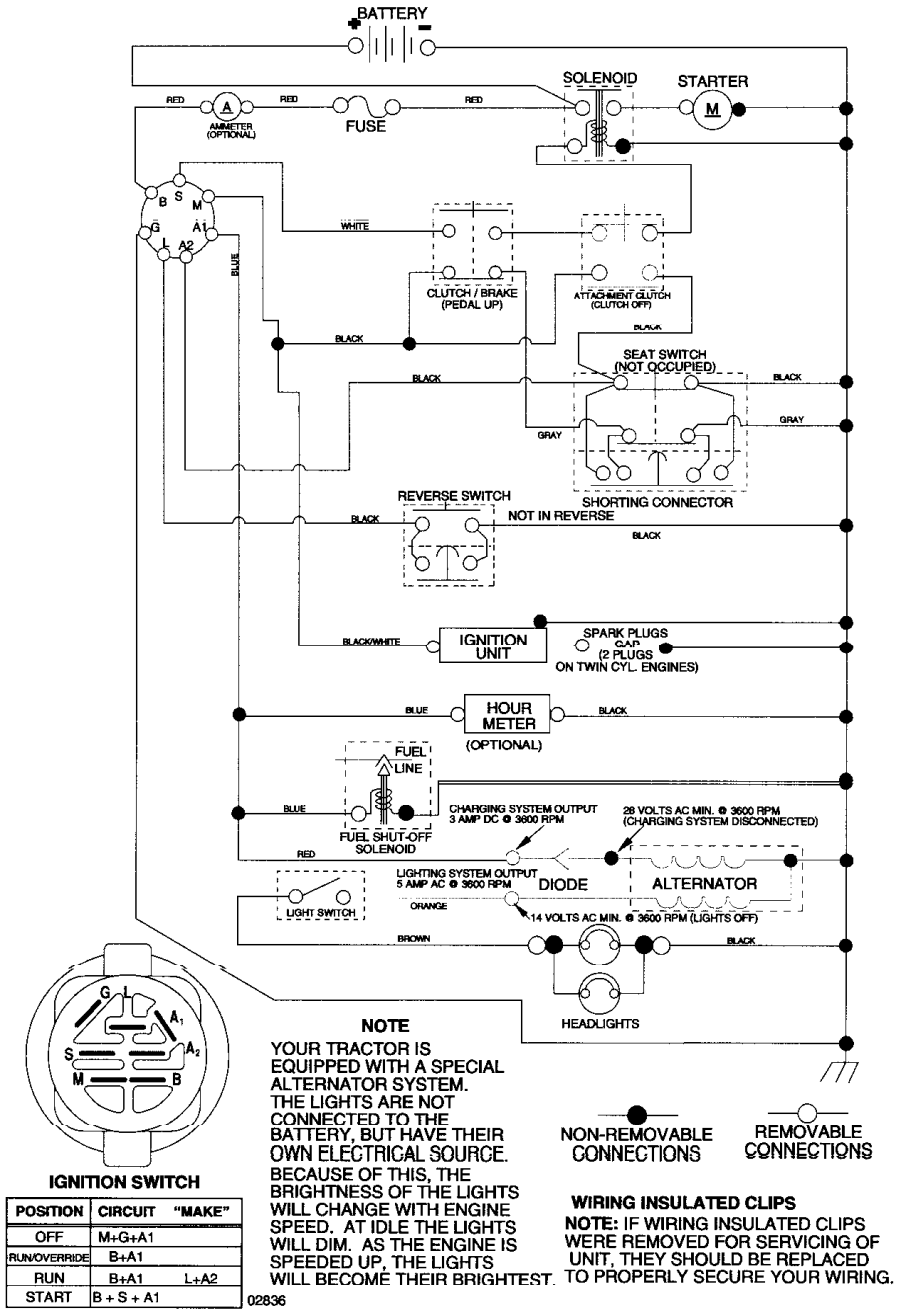

IGNITION SWITCH

POSITION	CIRCUIT "MAKE"	
OFF	M+G+A1	
RUN/OVERRIDE	B+A1	
RUN	B+A1	L+A2
START	B + S + A1	

02836

NOTE

YOUR TRACTOR IS EQUIPPED WITH A SPECIAL ALTERNATOR SYSTEM. THE LIGHTS ARE NOT CONNECTED TO THE BATTERY, BUT HAVE THEIR OWN ELECTRICAL SOURCE. BECAUSE OF THIS, THE BRIGHTNESS OF THE LIGHTS WILL CHANGE WITH ENGINE SPEED. AT IDLE THE LIGHTS WILL DIM. AS THE ENGINE IS SPEEDED UP, THE LIGHTS WILL BECOME THEIR BRIGHTEST.

NON-REMOVABLE CONNECTIONS

REMOVABLE CONNECTIONS

WIRING INSULATED CLIPS

NOTE: IF WIRING INSULATED CLIPS WERE REMOVED FOR SERVICING OF UNIT, THEY SHOULD BE REPLACED TO PROPERLY SECURE YOUR WIRING.

SCHEMA ELECTRIQUE